ROHDE & SCHWARZ

DOCUMENTATION

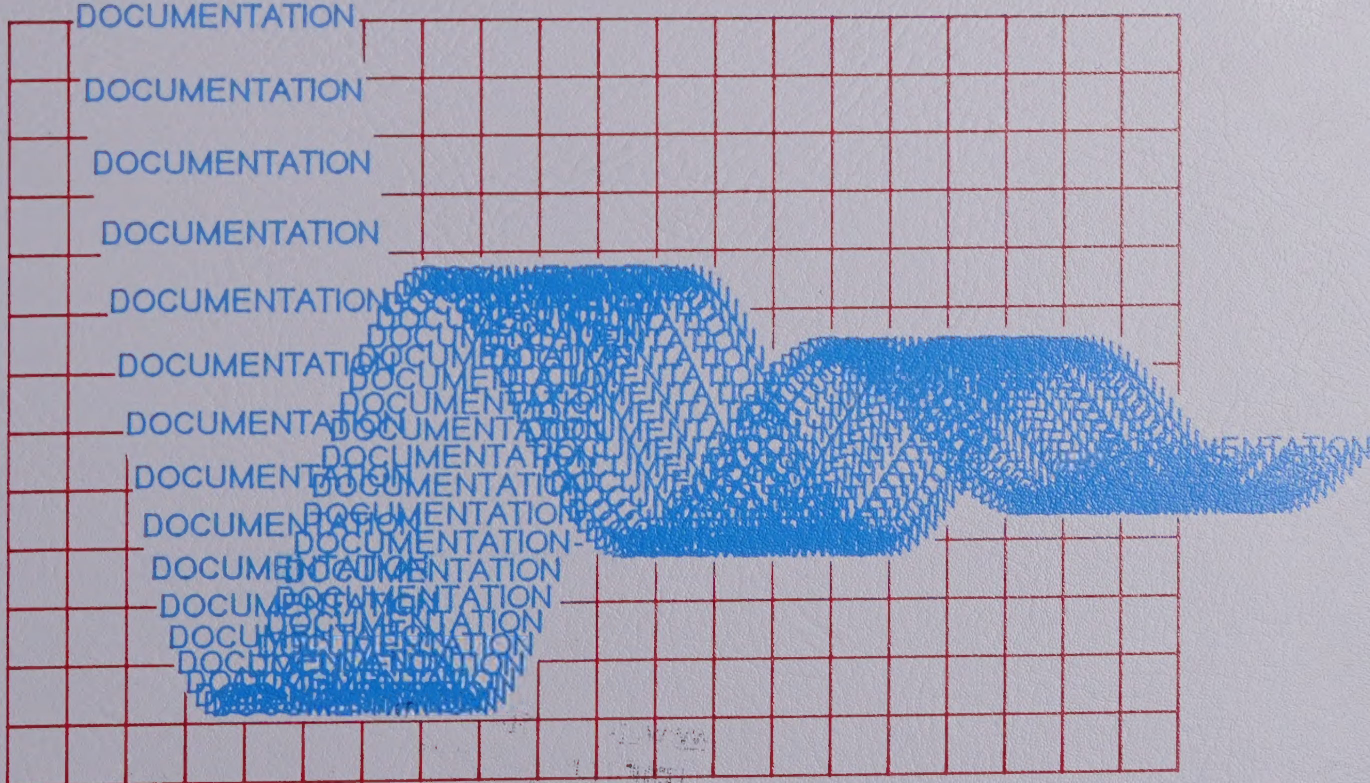

ROHDE&SCHWARZ

Measuring Instruments
and Systems Division

Manual

MILLIVOLTMETER
URV5

394.8010.02

LA TRADUCTION FRANÇAISE SUIT LE TEXTE ANGLAIS

Printed in the Federal
Republic of Germany

Table of Contents

		Page
1	Technical Information	
2	Preparation for Use and Operating Instructions	2.1
2.1	Legend to Figs. 2-1 and 2-2	2.1
2.1.1	Front View (Fig. 2-1)	2.1
2.1.2	Rear View (Fig. 2-2)	2.5
2.2	Preparation for Use	2.6
2.2.1	Setting up the URV5	2.6
2.2.2	Rack-mounting	2.6
2.2.3	Power Supply	2.6
2.2.4	Switching-on and Self-test	2.7
2.3	Operating Instructions	2.8
2.3.1	Connecting the URV5 to the Test Item	2.8
2.3.2	Probes	2.9
2.3.2.1	DC Probe	2.9
2.3.2.2	AC Probes	2.11
2.3.2.2.1	General Remarks on RF Measurements and RF Probes .	2.11
2.3.2.2.2	RF Probe	2.13
2.3.2.2.3	RF Insertion Units	2.16
2.3.2.2.4	Power Sensor	2.17
2.3.3	Selection of Measurement Channel	2.18
2.3.4	ZERO Key (Zeroing)	2.19
2.3.5	Readout of Measured Value (COMPUTE keys)	2.20
2.3.5.1	Readout in V, W, dBm, dBV (ABSOLUTE)	2.21
2.3.5.2	Relative Readout (Δ, Δ%, ΔdB, X/REF, with ΔINT, ΔEXT)	2.21
2.3.5.3	ATT CORR Key	2.23
2.3.5.4	FRQ CORR Key	2.24
2.3.5.5	COMP OFF Key	2.25
2.3.5.6	Display of Stored Reference, Correction and Impedance Values (RCL INP Key)	2.25
2.3.6	PEAK (PEP) Key	2.26
2.3.7	Switching off Autoranging and Selection of a Measurement Range	2.31
2.3.8	Measurement Speed (FILTER Key)	2.33
2.3.9	Secondary Function Level	2.34
2.3.9.1	Input of Reference Value, Correction Value or Impedance	2.35
2.3.9.2	Use of Measured Values as Reference Values	2.36
2.3.9.3	Calling up of Special Function Level	2.38
2.3.10	Special Function Level	2.38
2.3.11	Basic Setting	2.42
2.3.12	Error Messages	2.43

2.4 IEC-bus Control of URV5 ..... 2.45
2.4.1 Interface Functions 2.46
2.4.2 Setting of Device Address/Talk-Only Mode 2.47
2.4.2.1 Inserting/Removing a Probe during IEC-bus Operation (Remote Mode) 2.49
2.4.3 Device-specific IEC-bus Commands 2.50
2.4.3.1 Tables for IEC-bus Programming of URV5 in Measurement Mode 2.53
2.4.3.2 Additional Explanations and Notes on IEC-bus Commands for URV5 ..... 2.59
2.4.4 Data Output 2.67
2.4.4.1 Text String Output 2.67
2.4.4.2 Data Output in Measurement Mode 2.67
2.4.5 Error during IEC-bus Operation 2.70
2.4.6 Group of Addressed and Universal Commands 2.71
2.4.6.1 Table of Universal Commands 2.71
2.4.6.2 Remote/Local 2.72
2.4.6.3 Device Clear 2.72
2.4.6.4 Device Trigger 2.73
2.4.6.5 Service Request 2.73
2.4.6.6 Parallel Poll (PPOLL) 2.75
2.4.7 Output of Measured Value in Talk-Only Mode 2.76

2.5 Analog Output 2.77

2.6 IEC-bus Commands in Calibration Mode 2.78

Table of Contents

		Page
3	Maintenance	3.1
3.1	Basic Unit URV5	3.2
3.1.1	Required Measuring Equipment and Accessories	3.2
3.1.2	Checking the Rated Specifications	3.3
3.1.2.1	Self-Testing	3.3
3.1.2.2	Functional Check of Displays and Keyboard	3.3
3.1.2.3	Checking the IEC-Bus Interface	3.5
3.1.2.4	Checking the Probe Interface	3.8
3.1.2.5	Checking the Accuracy of DC Measurements	3.8
3.1.2.6	Checking the Accuracy of AC Measurements	3.9
3.1.2.7	Checking the PEAK (PEP) Function	3.10
3.1.3	Performance Test Report	3.11
3.2	RF Probe URV5-Z7	3.13
3.2.1	Required Measuring Equipment and Accessories	3.13
3.2.2	Checking the Rated Specification	3.13
3.2.2.1	Checking the Linearity	3.13
3.2.2.2	Checking the Input Capacitance	3.14
3.2.3	Performance Test Report	3.15
3.3	10-V Insertion Unit 50 Ω URV5-Z2	3.16
3.3.1	Required Measuring Equipment and Accessories	3.16
3.3.2	Checking the Rated Specifications	3.16
3.3.2.1	Checking the Linearity	3.16
3.3.2.2	Checking the Reflection Coefficient	3.17
3.3.3	Performance Test Report	3.18
3.4	100-V Insertion Unit 50 Ω URV5-Z4	3.19
3.4.1	Required Measuring Equipment and Accessories	3.19
3.4.2	Checking the Rated Specifications	3.20
3.4.2.1	Checking the Linearity	3.20
3.4.2.2	Checking the Reflection Coefficient	3.21
3.4.3	Performance Test Report	3.22
3.5	100-V Insertion Unit 75 Ω URV5-Z4	3.23
3.5.1	Required Measuring Equipment and Accessories	3.23
3.5.2	Checking the Rated Specifications	3.24
3.5.2.1	Checking the Linearity	3.24
3.5.2.2	Checking the Reflection Coefficient	3.25
3.5.3	Performance Test Report	3.26
3.6	DC Probe URV5-Z1	3.27
3.6.1	Required Measuring Equipment and Accessories	3.27
3.6.2	Checking the Rated Specifications	3.27
3.6.2.1	Checking the Measurement Accuracy	3.27
3.6.3	Performance Test Report	3.28
3.7	Checking the Frequency Response of RF Probes	3.29
3.8	Test Setup for Measurement of Reflection Coefficient	3.30

Table of Contents

		Page
4	Service Instructions for Total Unit	4.1
4.1	Circuit Description	4.1
4.1.1	Analog Board	4.1
4.1.1.1	AC Probe Amplifiers A and B	4.2
4.1.1.2	DC Probe Amplifier A/B	4.3
4.1.1.3	Peak-value Meter	4.4
4.1.1.4	A/D Converter	4.4
4.1.1.5	Analog Switch Decoder (30)	4.5
4.1.2	Computer (33, ..., 44, 48, 58)	4.5
4.1.3	Power Supply (35, 38, 48, 58)	4.6
4.1.4	DC Output (Option URV5-B2)	4.6
4.1.5	Measuring Heads	4.7
4.1.5.1	RF Probe URV5-Z7	4.8
4.1.5.1.1	20-/40-dB Dividers	4.8
4.1.5.1.2	50-/75-Ω Adapters	4.8
4.1.5.2	10-V Insertion Unit URV5-Z2	4.8
4.1.5.3	100-V Insertion Units URV5-Z4	4.8
4.1.5.4	DC Probe URV5-Z1	4.8
4.2	Mechanical Construction	4.9
	List of mechanical parts	in Appendix
	Figures pertaining to list of mechanical parts	in Appendix

ROHDE&SCHWARZ

Fast & Accurate

µP-controlled error correction

Millivolt-meter URV 5

DC, 9 kHz to 18 GHz

200 µV to 1000 V
1 nW to 2 kW (50 Ω)
−60 to +63 dBm (50 Ω)
0 to 400 V DC

IEC 625 Bus

IEEE 488

Millivoltmeter URV 5

DC, 9 kHz to 18 GHz/200 µV to 1000 V

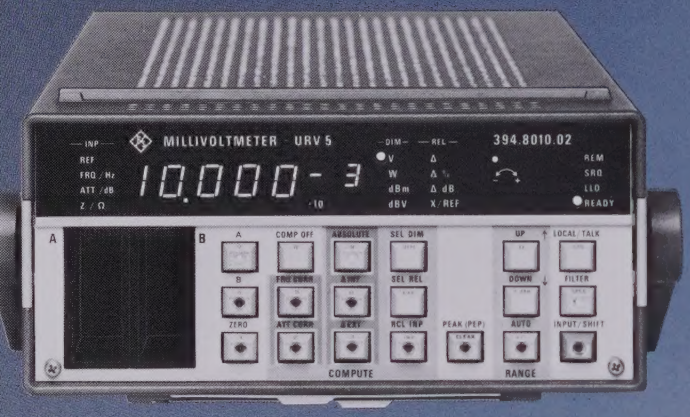

- Two test inputs
- Unexcelled accuracy through µP-controlled error correction: ±1 %
- Voltage, level and power measurement; tendency indication
- Probes, insertion units and power sensors may be exchanged as required
- Readout in all conventional units with freely selectable reference impedance; relative measurements
- Frequency-dependent calibration factors are taken into account
- DC output (option)

Scale 1:2.5

IEC 625 Bus

The **Millivoltmeter URV 5** is a broadband, sensitive voltage, level and power meter featuring high accuracy and suitable both for manual operation and for use in systems. A great variety of measuring heads and accessories allows the URV 5 to be used for all kinds of measurement:

- With RF probe and DC probe for no-load AC and DC voltage measurements in electronic circuits.
- Voltage (and power) measurements in coaxial 50-Ω and 75-Ω systems using the low-reflection and low-loss insertion units (up to 2 GHz).
- Power measurement up to 18 GHz using the power sensors of Power Meter NRV.

Readout One or two measuring heads can be connected to the URV 5. The values measured in the two channels can be displayed separately, set off against one another or referred to any reference (A, B, A/B, B/A, A/REF_A, B/REF_B). For absolute measurement, four different units can be selected:

volt V watt W dBm dBV

In the case of **relative measurements,** the difference, the difference in percent, the logarithmic difference or the ratio is indicated (ΔV, ΔW, Δ%, ΔdB, X/REF).

Tendency indication The Millivoltmeter has a fast tendency indication which follows the variations of the measured values, thus facilitating adjustments and maxima-minima settings.

Measurement rate With a test rate of up to 30 measurements/s, the URV 5 is ideally suited for use in systems. For applications requiring a noise-free indication rather than a high measurement rate, the results can be filtered, the measurement rate being then reduced accordingly. The measurement rate can be set in six steps via the filter functions (F0 to F5).

Waveform weighting The rectifiers used in the AC voltage measuring heads handle an extremely wide dynamic range of the input voltage of more than 90 dB. The partly non-linear transfer characteristic is individually linearized, so that for sinewave voltages the rms value is always read out. Non-sinewave voltages up to about 30 mV are also measured with rms weighting, whereas for voltages above 1 V the result is read out as $V_{pp}/2\sqrt{2}$ (peak weighting). If dividers are connected ahead of the measuring heads, the specified limits are shifted upwards (300 mV and 10 V for 100-V insertion units).

PEP measurement The PEAK (PEP) key is used for reading the peak envelope power of a modulated signal. Signals with a minimum pulse width of 200 µs and pulse repetition frequencies down to 0.05 Hz can be measured in this mode.

Frequency-response correction Each measuring head is individually calibrated. The test frequency need only be entered via the keyboard or IEC/IEEE bus and the URV 5 will take account of the calibration factor in the measurement result.

Attenuation correction The URV 5 automatically takes account of the division factors of the measuring heads. If a plug-on divider or attenuator pad is connected ahead of the measuring head, the corresponding attenuation can be entered and will be taken into account in the result.

Data input Upon pressing the SHIFT key, a decimal keypad is available to the user for data entry or for calling up **special functions,** such as:

- display test,
- entry and checking of IEC/IEEE-bus address,
- nonvolatile storage of reference values,
- selection of filters F0 to F5,
- indication of calibration date/recalling of calibration routines,
- transfer of reference value channel A to B and vice versa.

DC output (option) This option delivers a DC voltage proportional to the numerical readout. Thanks to the versatile conversion capability of the URV 5, the scale can be linear or logarithmic.

The **measuring heads** are individually calibrated and therefore interchangeable without affecting the error limits.

URV 5-Z1 **DC Probe**
0 to 400 V, R_{in} = 9 MΩ ‖ 6 pF

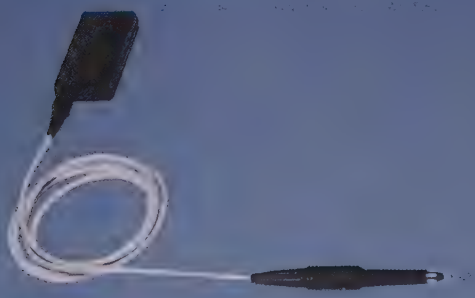

DC probe

URV 5-Z7 RF Probe with ground cable and clip, ground sleeve, ground strip, hook tip and solder tip

without plug-on divider
200 µV to 10 V, 20 kHz to 1 GHz

with **20-dB plug-on divider** (URV-Z6)
2 mV to 100 V, 1 to 500 MHz

with **40-dB plug-on divider** (URV-Z6)
20 mV to 1000 V, 500 kHz to 500 MHz

with **BNC adapter** (URV-Z6) with or without plug-on divider, for voltage measurement on 50-Ω coaxial lines

with **50-Ω adapter** (URV-Z50)
200 µV to 10 V, 20 kHz to 1 GHz
RF voltage measurement with integrated termination in 50-Ω coaxial systems

with **75-Ω adapter** (URV-Z3)
200 µV to 10 V, 20 kHz to 500 MHz
RF voltage measurement with integrated termination in 75-Ω coaxial systems (adaptable connectors)

RF probe (1) with accessories: ground cable and clip (2); ground sleeve (3); ground strip (4); hook tip (5); solder tip (6); 75-Ω adapter (7) with BNC adapter, adapter to 1.6/5.6 connectors (8) and to 2.5/6 connectors (9); BNC adapter (10) with reducer sleeve (11) for plug-on dividers (12, 13): 50-Ω adapter (14) with BNC adapter (15) to BNC connectors; case (16);
*) supplied with RF Probe URV 5-Z7

URV 5-Z9 **Dual Directional Coupler, 50 Ω**
100 kHz to 80 MHz, 10 µW to 2 kW
Coupling of forward and reflected power; in conjunction with two RF Probes URV 5-Z7 for measurement of directional power and reflection

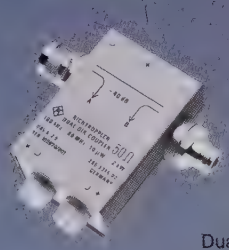

Dual directional coupler

URV 5-Z2 **10-V Insertion Unit, 50 Ω**
200 µV to 10 V
9 kHz to 2 GHz (model 55)
9 kHz to 1 GHz (model 04)
RF voltage measurement with **low reflection coefficient** in 50-Ω coaxial systems

10-V insertion unit

URV 5-Z4 **100-V Insertion Units, 50 and 75 Ω**
2 mV to 100 V
100 kHz to 2 GHz, 50 Ω (model 55)
100 kHz to 1 GHz, 50 Ω (model 04)
100 kHz to 2 GHz, 75 Ω (model 75)
RF voltage measurement in 50-Ω and 75-Ω coaxial systems for higher voltages and with extremely low reflection coefficient; power measurements up to 200 W (130 W) possible with suitable termination

NRV-Z1 **1-nW Power Sensor, 50 Ω**
1 nW to 20 mW, 10 MHz to 18 GHz

NRV-Z2 **Precision Power Sensor, 50 Ω**
100 nW to 500 mW, 10 MHz to 18 GHz
VSWR < 1.05 up to 4 GHz, < 1.2 up to 18 GHz

NRV-Z3 **400-pW Power Sensor, 75 Ω**
400 pW to 13 mW, 1 MHz to 2.5 GHz

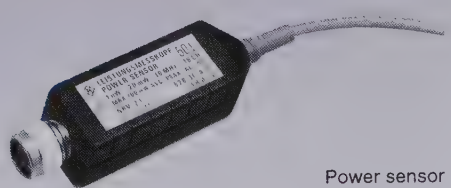

Power sensor

OPERATION

Selection of filter functions
SLOW (F2) ⇄ FAST (F4)
F0 to F5

F2 ⇄ FIL-TER ⇄ F4
SHIFT → Indication of instantaneous filter function, e.g. F4
→ F1

Call of a special function
e.g. LED test

SHIFT

IEC-bus address
indication of address set

SHIFT → SHIFT

Blue: secondary functions

Reference correction values

Indication: reference or correction values for selected channel

RCL INP → Indication reference value → Indication frequency →
RCL INP → Indication attenuation → Indication Z →
RCL INP → Indication meas. value

Storage of reference value, e.g. 150 mV for channel set

RCL INP → Indication of old ref. value
SHIFT
only if unit other than V

Transfer of instantaneous meas. value as reference

SHIFT

Nonvolatile storage of all reference, correction and impedance values (both channels)

SHIFT

Input pointer

Command code	Function
IA	Input for channel A valid
IB	Input for channel B valid
	Note: With commands marked by * it is possible to define the input channel — independent of the selected measurement channel — for all subsequent commands by sending IA or IB once in the command string (resetting by delimiter or PA, PB).

Setting commands

Command code	IA, IB	Function		
C0	–	Reading in of test data into basic unit (≙ DCL, SDC after addressing)		
C1	–	Basic setting: PA (PB), E0, F2, KA0, KF0, RG0, U0 ... , H0, N0, Q0, W3, Y1 Note: Resetting of input pointers IA, IB		
E0	*	Off	PEAK (PEP) measurement	
E1	*	On		
F0	*			
F1	*			
F2	*	SLOW	$4\frac{1}{2}$-digit display	measurement speed
F3	*			
F4	*	FAST		
F5	*	SUPERFAST	$3\frac{1}{2}$-digit display	
KF0	*	FRQ CORR off		
KF1	*	FRQ CORR on		corrective evaluation
KA0	*	ATT CORR off		
KA1	*	ATT CORR on (It is also possible to send KF01 instead of e.g. KF1)		
N0	–	Output with		alpha header
N1	–	Output without		
O1	*	Triggering		ZERO meas.
PA	–	Probe A		Setting of measurement channel
PB	–	Probe B		
		Note: Resetting of input pointers IA, IB		
RG, RG0	*	Autorange		
RG1	*	10 mV	100 mV	1 V
RG2	*	100 mV	1 V	10 V
RG3	*	1 V	10 V	100 V
RG4	*	10 V	100 V	1000 V
		AC probe, 10-V insertion unit	100-V insertion units	DC probe
		(It is also possible to send RG03 instead of e.g. RG3)		
U0	*	V		
U1	*	dBm		Output unit (ABSOLUTE)
U2	*	dBV		
U7	*	W		
U3 [[W] [X]]	*	Δlin	in V referred to internal reference value	Output unit (relative)
U4 [[W] [X]]	*	Δ%		
U5 [[W] [X]]	*	ΔdB		
U6 [[W] [X]]	*	X/Ref		
		Note: The letters X and/or W can be added to the commands U3 to U6. X = ΔEXT (reference = second channel) W = relative readout in W, e.g. U3X or U6WX		
Y0	–	off	Cyclical temperature measurement	
Y1	–	on		
YX	–	Triggering		
Y?	–	Read-out of set status, i.e. if cyclical temperature measurement is switched on or off (output via SRQ).		

Data input commands

DU ‹DATUM›	*	Reference value in V	Data input
DV ‹DATUM›	*	Reference value in V	
DB ‹DATUM›	*	Reference value in dBV	
DM ‹DATUM›	*	Reference value in dBm	
DW ‹DATUM›	*	Reference value in W	
DR ‹DATUM›	*	Reference impedance in Ω	

Data input commands (continued)

Command code	IA, IB	Function
DZ ‹DATUM›	*	Reference impedance in Ω
DA ‹DATUM›	*	Correction attenuation in dB
DF ‹DATUM›	*	Correction frequency in Hz
D =	*	Data copying to channel IA, IB
D = AA	–	Data copying values B same as in channel A
D = BB	–	Data copying values A same as in channel B

Interface commands

W0		NL		Delimiters for string output
W1		CR		
W2	–	ETX		
W3	–	CR + NL		
W4	–	EOI		
W5		NL + EOI		
W6	–	CR + EOI		
W7	–	ETX + EOI		
W8		CR + NL + EOI		
Q0	–	off		Call of SRQ
Q1	–	on	(all SRQ)	
Q2	–	on	(except for SRQ (80) ≙ meas. value ready, all SRQ	
Q3		on	(only error SRQ,) = 96)	
H0		off	Auxiliary mode	
H1	–	on	(PET time-out correction)	

Trigger commands

X0	–	Reset command for commands X3/X4
X1	–	Trigger command (≙ GET)
X2	*	Trigger command + storage of measured value as reference value
X3	–	Setting command for triggering measurement upon a service request
X4		Setting command for continuous triggering
X8	–	Trigger command for both measurement channels (measured values are separated by delimiters [corresponding to W0 to W8])
Z0	*	Output of reference value
Z1	*	Output of reference impedance
Z2	*	Output of correction frequency
Z3	*	Output of correction attenuation

Special commands

S0	–	LED test of display
S4		Indication of date under which the calibration values have been stored
S5	–	Output of error code according to hardware function errors occurred
S6	–	Checksum output of program memory
ST	*	Status output of all device settings for the selected channel

Keywords

CALIBRATION	Switchover between measurement and calibration mode: only commands for calibration are valid (CA..)

Separators and delimiters

Symbol	Designation	ASCII decimal equivalent	Recommended use
	Comma	44	Separator between commands
CR	Carriage Return	13	Delimiters
NL	New Line	10	
ETX		3	
EOI	If the EOI line is set during the transfer of the last character, this is also accepted as delimiter.		

SPECIFICATIONS

Basic Unit

(Unless otherwise stated, all specifications refer to voltage readout in V)

Test channels	2 (A and B), independent of each other, separately adjustable
Measuring heads	all intelligent measuring heads for URV 5 and NRV can be used
Measurement range	>94 dB (4 ranges in 20-dB steps)
Measurement mode	
absolute	A, B
relative	A/REF_A, B/REF_B, A/B, B/A
Readout mode	
absolute	V, W, dBm, dBV
relative	ΔV, ΔW, Δ%, ΔdB, X/REF
Display range	$\pm 19{,}999 \times 10^{\pm 18}$
Resolution	0.01 % (0.1 %) [1] of nominal measurement range with readout in V; 0.01 dB with readout in dBm, dBV or ΔdB; 0.01 % with readout in Δ %
Error limits	
18 to 28 °C	±0.15 % of rdg per channel
Additional error due to temperature	
10 to 40 °C	±0.25 % of rdg per channel
0 to 50 °C	±0.5 % of rdg per channel
Filter	for reduction of display noise, adjustable [2] in 6 steps (F0 to F5)
Zero adjustment	via keyboard or remote-controlled, duration approx. 4 s [2]
Measurement rate (manual)	approx. 1 measurement/s with filter F0 up to 30 measurements/s with filter F5 [2]
Measurement time (IEC/IEEE bus)	approx. 0.05 s with filter F5 up to 20 s with filter F0 [2]; with dual-channel measurement sum of the individual times as maximum, no switchover delay; all measurements triggered via IEC/IEEE bus are in steady state, even in case of range switchover

PEP measurement
Pulse width approx. 200 µs to CW
Minimum pulse repetition frequency

Filter	F0	F1	F2	F3	F4	F5
f_{min}/Hz	0.05	0.25	1	5	25	100

Frequency-response correction	can be selected for all AC voltage and power measuring heads; frequency response of measuring head is accounted for after entry of test frequency; one frequency per channel can be entered
Attenuation correction	can be switched on for all measuring heads, one attenuation value per channel can be entered (−199.99 to +199.99 dB)
Reference values	one reference value per channel for relative measurements (REF_A, REF_B); entry via keyboard, IEC/IEEE bus or transfer of measured value
Reference impedance	for computation and indication of power and power level; one value per channel can be entered (10^{-4} to 10^4 Ω); automatic initialization with impedance value (50/75 Ω) of power sensors for NRV and insertion units URV 5-Z2/-Z4

Remote control
Interface: IEC 625-1 (IEEE 488) for control of all device functions
Interface functions: SH1, AH1, T5, L4, SR1, RL1, DC1, DT1, PP1

General data
Operating temperature range: 0 to +50 °C, class I to IEC 359 (no dewing)
Storage temperature range: −40 to +70 °C
Power supply: 100/120/220/240 V ±10 %, 47 to 63 Hz, 400 Hz (30 VA)
Dimensions, weight: 241 mm × 110 mm × 340 mm, 4.4 kg

Option DC Output URV 5-B2
Output impedance: 1 kΩ
Output voltage range (EMF): −1.999 to +1.999 V
Resolution: 1 mV (10 digits)
Error: ±2 mV

Measuring heads and measurement functions

(All specifications without errors of basic unit)

DC voltage measurement — using DC Probe URV 5-Z1

Voltage measurement range: 0 to 400 V
Input impedance: 9 MΩ ‖ 6 pF
Maximum load: 400 V

General data
Dimensions, weight: 15 mm dia. × 125 mm, 80 g
Length of connecting cable: 1.2 m
Temperature range: see basic unit URV 5

Nominal range	Resolution	Max. reading	Error limits
1 V	100 µV	1.2200 V	±(0.15 % of rdg + 5 digits)
10 V	1 mV	12.200 V	±(0.15 % of rdg + 1 digit)
100 V	10 mV	122.00 V	±(0.15 % of rdg + 1 digit)
400 V	100 mV	420.00 V	±(0.35 % of rdg + 1 digit)

Additional error due to temperature
10 to 40 °C: ±0.25 % of rdg
0 to 50 °C: ±0.5 % of rdg

Filter-dependent data

Filter	F0	F1	F2	F3	F4	F5
Series-mode rejection 50 (60) Hz ±0.05 % in dB	64 (15)	64 (15)	64 (15)	64 (15)	64 (15)	–
Measurement rate (manual) [4]	1/s	2/s	5/s	9/s	15/s	31/s
Measurement time (IEC/IEEE bus), trigger to output of 1st byte [4]	13 s	3.2 s	0.8 s	0.22 s	0.07 s	0.034 s

AC voltage measurement — using Insertion Unit URV 5-Z2

Voltage measurement range: 200 µV to 10 V
Level/power measurement range: −60 to +33 dBm/1 nW to 2 W
Frequency range: 9 kHz to 2 GHz (model 55)
9 kHz to 1 GHz (model 04)
Characteristic impedance: 50 Ω
Max. input voltage rms (sinewave): 15 V
peak: 22 V
DC: 50 V

Nominal range	Resolution	Max. reading	Error limits
10 mV	1 µV	12.200 mV	±(0.3 % of rdg + 3 digits
100 mV	10 µV	122.00 mV	+ frequency response error
1 V	100 µV	1.2200 V	+ zero error)
10 V	1 mV	10.500 V	

Maximum reflection coefficient and VSWR (model 04 up to 1 GHz)

	DC	200 MHz	500 MHz	1 GHz	1.6 GHz	2 GHz
r/%	1	2	7	10	15	
VSWR	1.02	1.04	1.15	1.22	1.35	

Frequency response error in % of rdg

	9 kHz	20 kHz	50 kHz	30 MHz	100 MHz	200 MHz	500 MHz	1 GHz	2 GHz	
Model 55	6 [5]	2	0.5	1.5	2	3	5	7 [6]		[7]
				1.5	2	5	11	18		[8]
Model 04	6 [5]	2	0.5	1.5	2	3	5			[7]
				1.5	2	6	13			[8]

General data
Connectors: N male, N female
Dimensions, weight: 85 mm × 115 mm × 30 mm, 0.35 kg
Length of connecting cable: 1.2 m
Temperature range: see basic unit

Zero error, display noise, measurement rate and additional error due to temperature see additional data for AC voltage measurement on back cover

Footnotes see page 7.

AC voltage measurement — using Insertion Unit URV 5-Z4

Voltage measurement range	2 mV to 100 V
Level measurement range	−40 to +53 dBm (models 55 and 04) −42 to +51 dBm (model 75)
Power measurement range	100 nW to 200 W (models 55 and 04) 50 nW to 130 W (model 75)
Frequency range	100 kHz to 2 GHz (models 55 and 75) 100 kHz to 1 GHz (model 04)
Characteristic impedance	50 Ω (models 55 and 04) 75 Ω (model 75)
Max. input voltage rms (sinewave)	150 V
peak	220 V
DC	1000 V

Maximum reflection coefficient and VSWR

		DC	200 kHz	500 kHz	1 MHz	1.6 GHz	2 GHz
Model 55	r/%	1		2		3	
	VSWR	1.02		1.04		1.06	
Model 04	r/%	1		2			
	VSWR	1.02		1.04			
Model 75	r/%	1.5	2	3		5	
	VSWR	1.03	1.04	1.06		1.11	

Nominal range	Resolution[1]	Max reading	Error limits 18 to 28 °C
100 mV	10 µV	122.00 mV	±(0.3 % of rdg + 3 digits
1 V	100 µV	1.2200 V	+ frequency response error
10 V	1 mV	12.200 V	+ zero error)
100 V	10 mV	105.00 V	

Frequency response error in % of rdg

	100 kHz	200 kHz	500 kHz	1 MHz	30 MHz	200 MHz	500 MHz	1 GHz	1.6 GHz	2 GHz	
Model 55	15[5]	6[5]	2	1	1.5	2	4	6	8[9]		[7]
					2	5	7	10	18		[8]
Model 04	15[5]	6[5]	2	1	1.5	2	4				[7]
					2	6	9				[8]
Model 75	20[5]	8[5]	2	1	2	2.5	5	7	10[9]		[7]
					2	5	7	12	20		[8]

Zero error, display noise, measurement rate and additional error due to temperature see additional data for AC voltage measurement on back cover

General data

Connectors	N male, N female
Dimensions, weight	85 mm × 115 mm × 30 mm, 0.35 kg
Length of connecting cable	1.2 m
Temperature range	see basic unit

AC voltage measurement — using RF Probe URV 5-Z7

RF probe	without plug-on divider	with 20 dB plug-on divider	with 40-dB plug-on divider	with 50-Ω adapter	with 75-Ω adapter
Voltage measurement range	200 µV to 10 V	2 mV to 100 V	20 mV to 1000 V	200 µV to 10 V	200 µV to 10 V
Level measurement range 50 (75) Ω	−60 to +33 dBm	−40 to +53 dBm	−20 to +73 dBm	−60 to +33 dBm	(−62 to +31 dBm)
Power measurement range 50 (75) Ω	1 nW to 2 W	100 nW to 200 W	10 µW to 20 kW	1 nW to 2 W	(500 pW to 1.3 W)
Frequency range	20 kHz to 1 GHz	1 to 500 MHz	0.5 to 500 MHz	20 kHz to 1 GHz	20 kHz to 500 MHz
Input impedance $C_{in} \| R_p$ (f = 10 MHz)	2.5 pF‖ > 80 kΩ	1 pF‖ > 1 MΩ	0.5 pF‖ > 10 MΩ	50 Ω	75 Ω
Max. input voltage rms (sinewave)	15 V	150 V	1050 V	10 V	12 V
peak	22 V	220 V	1500 V	22 V	22 V
DC	400 V	1000 V	1000 V	10 V	12 V

Maximum reflection coefficient and VSWR (adapter with probe)

		DC	50 kHz	100 kHz	200 kHz	500 kHz	700 MHz	1 GHz
50-Ω adapter	r/%	1.5	3	5		10	18	
	VSWR	1.03	1.06	1.11		1.22	1,44	
75-Ω adapter (with BNC connector)	r/%	1.5		3	10			
	VSWR	1.03		1.06	1.22			

Nominal range	Resolution	Max reading	Error limits 18 to 28 °C
10 mV	1 µV	12.200 mV	±(0.3 % of reading + 3 digits
100 mV	10 µV	122.00 mV	+ frequency response error
1 V	100 µV	1.2200 V	+ zero error)
10 V	1 mV	10.500 V	

Frequency response error in % of rdg

	20 kHz	50 kHz	100 kHz	200 kHz	500 kHz	1 MHz	2 MHz	30 MHz	100 MHz	200 MHz	500 MHz	1 GHz	
RF probe with 50-Ω adapter	10[5]	2	1.5	1					2	3	7	11[10]	[11]
									2	4	10	20	[8]
75-Ω adapter (with BNC connector)	10[5]	2	1.5	1					2	4	12		
RF probe with BNC adapter	10[5]	2	1	0.5					1.5	3	12		
and with 20-dB plug-on divider					20[5]		12		15	20			
40-dB plug-on divider					20[5]		7		10	15			

Zero error, display noise, measurement rate and additional error due to temperature see additional data for AC voltage measurement on back cover

General data

Dimensions, weights	
Probe	18 mm dia. × 100 mm, 140 g
Plug-on divider	10 mm dia. × 45 mm, 7 g
BNC adapter	30 mm × 50 mm, 45 g
50-Ω adapter	16 mm dia. × 50 mm, 30 g
75-Ω adapter	16 mm dia. × 75 mm, 50 g
Length of connecting cable	1.25 m
Temperature range	see basic unit

---

[1] Filter F5.
[2] Further details see measuring heads and measuring functions.
[3] With filters F0 to F4.
[4] Without range switchover, 1 channel.
[5] The additional error due to temperature stated in the additional data may be exceeded at temperatures above 28 °C.
[6] +3 % for 1 to 10 V.
[7] With frequency response correction (linear interpolation between calibration frequencies).
Calibration frequencies: 32/40/50/64/80/100/120/160/200/250/320/400/500/600/700/800/900/1000/1100/1200/1300/1400/1500/1600/1700/1800/1900/2000 MHz
1100 to 2000 MHz models 55 and 75 only.
[8] Without frequency response correction.
[9] +5 % for 10 to 100 V.
[10] +7 % for 1 to 10 V.
[11] With frequency response correction (linear interpolation between calibration frequencies).
Calibration frequencies: 32/40/50/64/80/100/120/160/200/250/300/350/400/450/500/550/600/650/700/750/800/850/900/950/1000 MHz.

SPECIFICATIONS, ORDERING INFORMATION

Measuring heads and measurement functions (continued)

AC voltage measurement — additional data

Measurement rate

Filter	F0	F1	F2	F3	F4	F5
Measurement rate (manual operation)	1/s	1.5/s	3/s	5/s	10/s	16/s
Measuring time (IEC/IEEE bus), trigger to output of 1st byte	22 s	5.5 s	1.4 s	0.36 s	0.10 s	0.065 s

Red curves: display noise[12] (double standard deviation, observation time 1 min, temperature of measuring head 18 to 28 °C, approx. double values at 0 °C) ▶

Black curve: zero error[12] (1 h after zero adjustment, ±1 °C, after warmup of 2 hours with measuring head connected) ▶

Additional error due to temperature
10 to 40 °C ..... ±2% of rdg
0 to 50 °C ..... ±5% of rdg

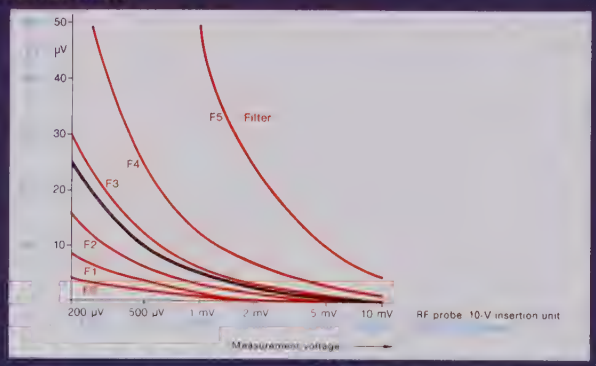

Directional power and reflection measurement — using Dual Directional Coupler URV 5-Z9 and 2 RF Probes URV 5-Z7

Level/power measurement range ... -20 to +63 dBm/10 µW to 2 kW
Minimum forward power required for reflection measurements ... 50 mW (17 dBm)
Frequency range ... 100 kHz to 80 MHz
Characteristic impedance ... 50 Ω
Coupling (nominal value) ... 40 dB

Error limits in dB for forward power measured with reflection-free load (18 to 28 °C)

0.1	0.2	0.4	30	50	80 MHz	
±0.20	±0.15	±0.10	±0.15	+0.20		[13]
-1/+0.2	-0.4/+0.2	±0.2	±0.35	±0.8		[14]

Display noise and zero error see page 7 (RF probe), taking into account the coupling
Additional error due to temperature incl. RF Probe URV 5-Z7
10 to 40 °C ..... ±0.2 dB
0 to 50 °C ..... ±0.5 dB

Minimum directivity in dB (typ. values in parentheses)

0.1	0.2	0.4	30	50 MHz	80
23(30)	28(35)	35(40)	30(35)	20(30)	

Insertion loss ... ≤0.015 dB
Reflection coefficient
0.1 to 30 MHz ... ≤1% (VSWR ≤ 1.02)
30 to 80 MHz ... ≤1.5% (VSWR ≤ 1.03)
Max. permissible forward power P_F ... see diagram

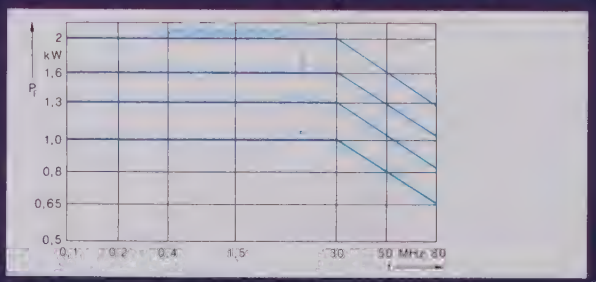

General data
Connectors ... N male, N female
Dimensions, weight ... 118 mm × 102 mm × 45 mm, 0.5 kg
Temperature range ... see basic unit URV 5

Power measurement — using Power Sensors NRV-Z1/-Z2/-Z3

See page 3, detailed information in data sheet 828251 of Dual-channel Power Meter NRV

Ordering information

Order designation ▶	Millivoltmeter URV 5	394.8010.02
Option DC Output	URV 5-B2	395.0112.02
19" Rack Adapter	ZZA-12	079.0631.00
Measuring heads		
DC Probe with ground cable, clamp-on tip and BNC adapter	URV 5-Z1	395.0512.02
10-V Insertion Unit		
50 Ω, 2 GHz (model 55)	URV 5-Z2	395.1019.55
50 Ω, 1 GHz (model 04)	URV 5-Z2	395.1019.04
100-V Insertion Unit		
50 Ω, 2 GHz (model 55)	URV 5-Z4	395.1619.55
50 Ω, 1 GHz (model 04)	URV 5-Z4	395.1619.04
75 Ω, 2 GHz (model 75)	URV 5-Z4	395.1619.75
RF Probe with ground cable and clip, ground sleeve and strip, hook tip and solder tip, in case	URV 5-Z7	395.2615.02
Power Sensor		
50 Ω, 18 GHz, 20 mW	NRV-Z1	828.3018.02
50 Ω, 18 GHz, 500 mW	NRV-Z2	828.3218.02
75 Ω, 2.5 GHz, 13 mW	NRV-Z3	828.3418.02
Recommended extras for RF probe		
Accessory Set comprising plug-on dividers 20 dB/40 dB, BNC adapter, reducing sleeve for dividers	URV-Z6	292.5364.02
50-Ω Adapter (BNC female connector) with adapter to BNC connector	URV-Z50	394.9816.50
75-Ω Adapter with adapters to BNC connector, 2.5/6 connectors and 1.6/5.6 connectors	URV-Z3	243.9118.70
Dual Directional Coupler 2 kW, 0.1 to 80 MHz	URV 5-Z9	265.5315.02
Servicing aids		
Service Kit for calibration of basic units URV 5 and NRV	UZ-8	394.9968.02

[12] Higher values with plug-on dividers and attenuation correction.
[13] Taking into account calibration values for coupling, including probe error
Calibration frequencies: 0.1/0.15/0.2/0.3/0.4/0.45/0.5/0.7/1/1.5/3/5/10/20/30/40/50/60/70/80 MHz
[14] When using nominal coupling of 40 dB, including probe error.

ROHDE&SCHWARZ
GmbH & Co. KG. • D-81671 München • Mühldorfstr. 15 • Tel. (089) 4129-0 • Telefax (089) 4129-3567 • Telex 523703
Printed in the Fed. Rep. of Germany • Subject to change • Data without tolerances: order of magnitude only
PD 756.4614.21 491/894 (Re we)

Supplement to Manual
Millivoltmeter URV5
394.8010.02

Due to the high sensitivity of the URV5/NRV Power Heads the influence of considerable electromagnetic fields may cause reading errors in the lower dynamic measurement range. One reason is the shielding attenuation of the cable and may therefore not be improved to an unlimited value. For high sensitivity measurements exposed to interfering electromagnetic fields of some Volts/m the application of additional shielding may be necessary.

ROHDE&SCHWARZ

EC Certificate of Conformity

CE

Certificate No.: 9502165

This is to certify that:

Equipment type	Order No.	Designation
URV5	0394.8010.02	RF DC Millivoltmeter
URV5-B2	0395.0112.02	DC Output

complies with the provisions of the Directive of the Council of the European Union on the approximation of the laws of the Member States

- relating to electrical equipment for use within defined voltage limits (73/23/EEC revised by 93/68/EEC)

- relating to electromagnetic compatibility (89/336/EEC revised by 91/263/EEC, 92/31/EEC, 93/68/EEC)

Conformity is proven by compliance with the following standards:

EN61010-1 : 1991
EN50081-1 : 1992
EN50082-1 : 1992

Affixing the EC conformity mark as from 1995

ROHDE & SCHWARZ GmbH & Co. KG
Mühldorfstr. 15, D-81671 München

Munich, 1997-08-26

Central Quality Management FS-QZ / Becker

2 Preparation for Use and Operating Instructions

(See Figs. 2-1 and 2-2 in the Appendix)

The values given in this section are not guaranteed; only the specifications contained in the data sheet or technical information are binding. The values cited in the manual are intended as guidelines for the user and can under circumstances differ from those of the data sheet.

2.1 Legend to Figs. 2-1 and 2-2

The underlined numbers of the control elements and indicators refer to the corresponding numbers in the Figs. 2-1 (Front view) and 2-2 (Rear view) in the Appendix.

2.1.1 Front View (Fig. 2-1)

Ref.	Marking	Function
1	REF FRQ/Hz ATT/dB Z/Ω	LED display for identification of the value indicated in 2 as reference value, frequency or attenuation correction value, and reference impedance in case of recall or entry.
2		4 1/2-digit readout of measured value with 1 1/2-digit exponent.
3	V Δ W Δ% dBm ΔdB dBV X/REF	LED display for indication of the unit.
4		Circular LED display for tendency indication.
5	REM SRQ LLO READY	LED display for indication of IEC-bus operation: REM: remote mode SRQ: service request LLO: local lockout state (switchover to manual operation not possible) READY: valid measured value in output buffer
6	LOCAL/TALK STO	Key for interrupting the remote mode or key for data output in talk-only mode. Secondary function: Storage of reference values or of IEC-bus address. Special function: none

Ref.	Marking	Function
7	FILTER SPEC	Key with LED for selecting the measurement speed F2 to F4. LED lights: SLOW (FØ to F2) LED off: FAST (F3 to F5) Secondary function: Calling up of special function level. Special function: none
8	INPUT/SHIFT	Key with LED for selecting secondary function level of key. Secondary function: ┐ Special function: ┘ return to measurement mode
9	UP ↑	Key for selecting next higher measurement range.
	0	Secondary function: zero key Special function: LED test
	DOWN ↓	Key for selecting the next lower measurement range.
	•/to	Secondary function: Entry of decimal point for data input or entry of talk-only mode with special function 1 (entry of IEC-bus address). Special function: none
	AUTO	Key with LED for switching on and off autoranging. LED lights: autoranging is operative
	+/-	Secondary function: Change of polarity sign for data input. Special function: none
10	PEAK (PEP) CLEAR	Key for switching on/off weighted peak-responding measurement. (not with DC measurement) Secondary function: Cancel key for data input Special function: No error message: basic initialization of device. With error message: erasure of error message, no reinitialization.

Ref.	Marking	Function
11	SEL DIM DIM SEL REL EXP	Stepping keys for selection of unit (DIM: V, W, dBm, dBV) or conversion modes in case of relative values (REL: Δ, Δ%, ΔdB, X/REF). In case of relative values, only the basic units V and W can be selected. Secondary function: DIM: stepping key for selection of the reference value unit for data input. EXP: cancel/switchover key for subsequent entry of the tens exponent. Special function: none
12	RCL INP INP	Stepping key for output of stored input values (REF, FRQ, ATT, Z, -off-) Secondary function: stepping key for selection of desired input parameter (REF, FRQ, ATT, Z) Special function: none
13	ABSOLUTE 9 ΔINT 6 ΔEXT 3	Keyboard for selection of readout mode ABSOLUTE: readout in V, W, dBm, dBV ΔINT: relative readout referred to an internally stored reference value ΔEXT: relative readout referred to the respective second channel (A relative to B or B relative to A) Secondary function: numerical keys 9, 6, 3 Special functions: 3: measurement speed FØ...F5 6: check sum indication of program memory

Ref.	Marking	Function
14	FRQ CORR 5 ATT CORR 2	Keys for switching on/off a computed frequency correction value for an entered frequency or an attenuation correction value for an entered attenuation value. (FRQ CORR not possible with DC-measurement). Secondary function: numerical keys 2, 5 Special functions: 2: storage of currently valid entered values as switch-on initialization values. 5: indication of last error message
15	COMP OFF 8	Key for switching of all units called up via the COMPUTER keys as well as correction values → indication in V only Secondary function: numerical key 8 Special function: none
16	ZERO 1	Key for automatic zeroing if low voltages are measured (not for DC measurement). Secondary function: numerical key 1 Special function: Calling up of routines for entry of IEC-bus address.
17	A 7 B 4	Keys for selection of current main measurement channel A or B (relevant for data input, operation and mutual channel reference) Secondary function: numerical keys 4, 7 Special function: 4: calling up of routines for instrument calibration (can be inhibited via internal connector)
18		Openings for insertion of probes.

2.1.2 Rear View (Fig. 2-2)

Ref.	Marking	Function
19	ON POWER OFF	Power switch
20	⊥ 47 - 63 Hz	AC supply connector
21	100 V / 120 V / 220 V / 240 V IEC 127-T500H / 250 V	AC voltage selector and fuse holder with specification of fuses.
22	IEC 625	Connector for IEC-bus interface
23	 DC	Coaxial socket for DC voltage output (option URV5-B2).

2.2 Preparation for Use

2.2.1 Setting up the URV5

The URV5 may be operated in any position. To enhance operating convenience and facilitate reading of the indications, the URV5 should be set up in a slightly tilted position. For this purpose the carrying handle must be brought into the desired position by pressing the two swivel joints and then locked into position.

Care should be taken not to cover up the ventilating louvres on the top and bottom side of the instrument. The URV5 may be used at ambient temperatures between 0°C and +50°C max. Condensation should not be allowed to form on the unit. If this cannot be avoided, however, wait until the unit is dry before switching on.

2.2.2 Rack-mounting

The URV5 can be mounted into 19" racks with the aid of an Adapter ZZA-22 (recommended extra). To do so, the two cover panels must be replaced by special covers, the carrying handle and the two side strips be removed and a filter insert be screwed to the left- or right-hand side.

2.2.3 Power Supply

The URV5 is designed for operation from AC supply voltages of 100 V, 120 V, 220 V und 240 V ±10% and frequencies of 47 to 63 Hz. It is factory-adjusted for 220 V, but can easily be adapted to another voltage. For this purpose, remove the cap of the fuse holder using a screwdriver, replace the fuse, if required, and reinsert the cap so that the triangular marker points to the desired voltage. For AC supply voltages of 100 V, 120 V, 220 V and 240 V a fuse T500H / 250 V to IEC 127 must be used.

The URV5 is connected to the AC supply via the power connector and cable supplied with the unit. Since the unit complies with the regulations of VDE 0411, safety class I, the following must be observed:

The URV5 must be connected to a socket with safety ground contact!

2.2.4 Switching-on and Self-test

The URV5 is switched on by means of the power switch on the rear panel. The following appears on the display:

Then the device address for the IEC-bus is indicated, e.g.:

for address 9

or if talk-only mode has been selected

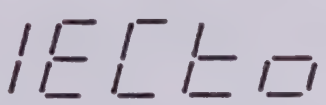

(see section 2.4.2: Setting of Device Address / Talk-Only Mode).

When these routines are executed, the RAM, the data stored in the EPROM (calibration values, IEC-bus address, reference values, etc.), the analog hardware (A/D converter, offset voltage for amplifiers, as well as various test settings) are checked and the URV5 is then initialized with these data.

In case of a fault, an error message will be output (see section 2.3.12).

The instrument then automatically returns to a basic setting (see section 2.3.11: Basic Setting).

If one probe (or both) is inserted, the probe data are automatically read in and checked, the URV5 being then ready for measurements. If there is no probe at all, dashes (-----) will appear on display 5.

If the RAM is defective, "fault" will be indicated on the display.

2.3 Operating Instructions

2.3.1 Connecting the URV5 to the Test Item

For measurements with the URV5, at least one probe is required.

The probes consist of the measuring head proper (probe or terminated unit/insertion unit), connecting cable and plug-in adapter, which is inserted and locked in position at one of the openings 18 provided in the basic unit.

In this plug-in adapter the main probe data, such as probe identification (e.g. DC or AC probe), calibration data and frequency correction curves are stored, read out after correct insertion of the probe and considered in the subsequent measurement according to the instrument setting.

The caption

displayed indicates the initialization of a probe.

The URV5 can be operated with one probe only, i.e. in the channel which contains the probe. Dual-channel measurements are of course only possible if two probes (which need **not** be identical) are inserted. Otherwise a corresponding message will be output and the instrument returns to the original measurement mode.

Note: The operation of the URV5 has been designed so that the user can use the two measurement channels like two measuring instruments operated via a keyboard.

In the following sections, operation of one channel only is therefore described, departures from this practice being separately mentioned.

2.3.2 Probes

The probes are inserted into the openings 18 (A or B) together with the plug-in adapters. Correct insertion of the probes is recognized by the URV5 both in manual and in remote control mode, but it is recommended to insert the probes in manual mode only. In remote mode, with correspondingly adjusted interface (Q1 to Q3), the URV5 only sends SRQ (114) to the controller in order to avoid any interruption of the current program.

(When removing the probe in the main measurement channel: SRQ (104) and abortion of measurement).

The probe data for evaluation in the instrument are read in **immediately in local mode**, whereas **in remote mode** they are read in only **after the command CØ has been sent** to the URV5 or after switching to local mode.

The type of probe (DC/AC probe, RF probe etc.) and further probe-specific data such as frequency response, calibration and attenuation factors (e.g. for 100-V insertion unit) are thus known to the instrument and will be considered for the operation and evaluation of the corresponding channel. After the data have been read in, the URV5 is immediately ready for measurements.

> **Note:** For complete technical data and specifications please refer to the URV5 data sheet.
>
> The values cited in the manual are intended as guidelines for the user and can under circumstances differ from those of the data sheet.

2.3.2.1 DC Probe

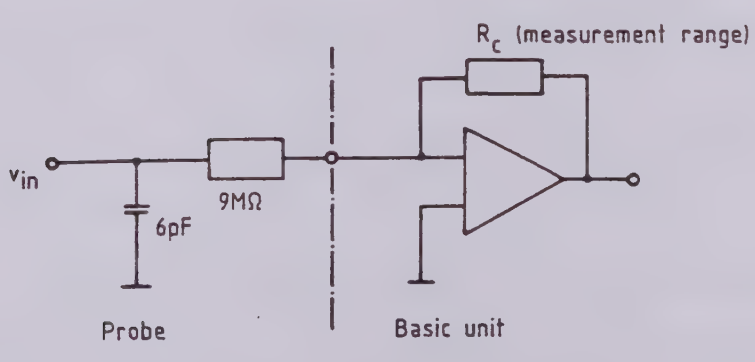

V_{in}: 0 to 400 V

R_{in}: 9 MΩ shunted by 6pF

Fig. 2-3 Equivalent circuit diagram of DC probe

The maximum voltage for the DC probe is 400 V. Care should be taken that the probe is always referred to chassis ground, i.e. **not floating. Reference potential is always the chassis ground.**

An essential advantage of this DC probe is the low capacitive load (6 pF). Thus DC measurements are also possible on RF circuits.

It should be noted that the precision resistor in the probe is temperature-dependent (9 MΩ, approx. 100 ppm/°C), i.e. the probe temperature (raised e.g. by holding the probe for some time) will affect the measuring accuracy and may cause a slight drift in indication.

For measuring speed see section 2.3.8.

The ZERO-/PEAK and FRQ CORR keys are disabled in case of DC measurement.

2.3.2.2 AC Probes

2.3.2.2.1 General Remarks on RF Measurements and RF Probes

1. Waveform weighting

The URV5 reads out the rms value of sinewave voltages of any magnitude as long as they are within the measurement range of the instrument. With other waveforms, however, the weighting is dependent on the magnitude of the voltage to be measured, since a diode detector has a square-law response only at low voltages up to about 30 mV and therefore measures the true rms value only up to this value independent of the waveform of the test voltage. This range can be expanded to 3 V by means of plug-on voltage dividers, so that the true rms value of an AC voltage can be measured in the range from 200 µV to 3 V.

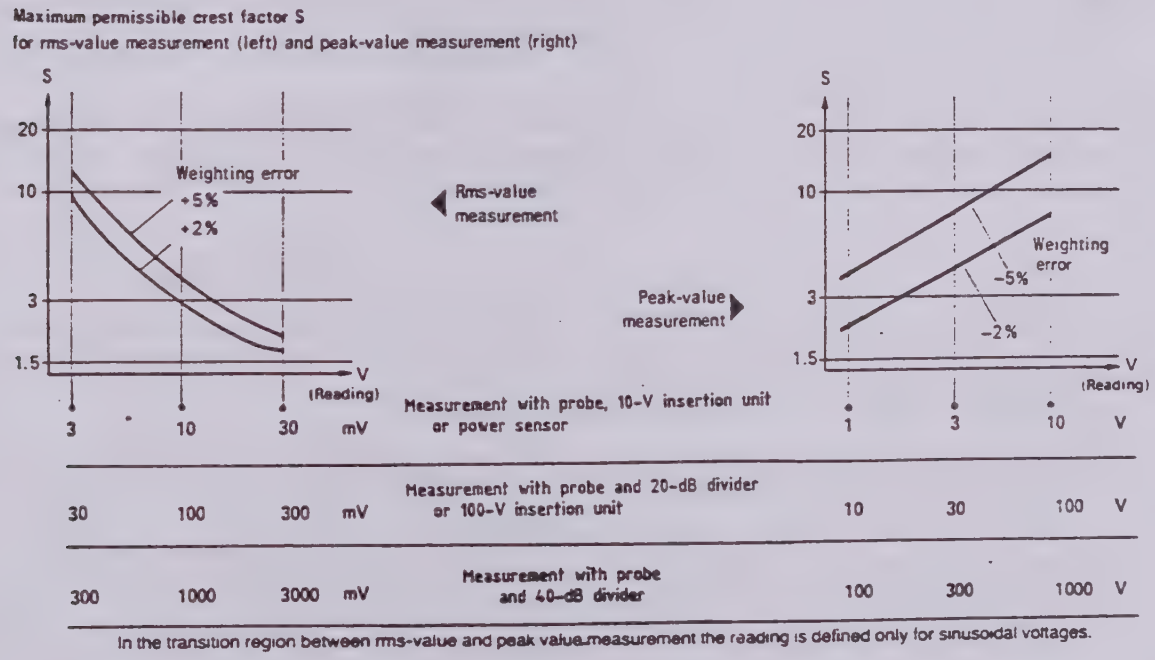

Fig. 2-4 Waveform weighting and maximum crest factor for RF measurements using URV5 probes

In the transition range from rms to peak-responding measurement the measured value is only defined for sinewave voltages.

In Fig. 2-4 the maximum permissible crest factor is shown as a function of the magnitude of the test voltage at which the error of the measured rms value relative to the true rms value does not exceed 2% or 5%.

With test voltages above 1 V (above 10 V using 20-dB divider or 100-V insertion unit, above 100 V using 40-dB divider), the diode detector acts a a peak-responding rectifier. Since a full-wave rectifier is incorporated in the probes, the peak-to-peak value is measured but the value $V_{pp}/2\sqrt{2}$ is indicated. For sinewave voltages this corresponds to readout of the rms value.

Fig. 2-4 shows the maximum permissible crest factor for a weighting error of the peak-responding rectifier of -2% and -5% as a function of the magnitude of the test voltage.

For peak-responding measurement see also section 2.3.6: PEAK (PEP) Measurement.

2. The lower cutoff frequency (3 dB) of the RF probes is temperature-dependent, the value specified for the individual probes being valid in the temperature range +18°C to +28°C. In addition, it can be assumed that as a rule of thumb this cutoff frequency is doubled for every 10 K temperature rise and halved for every 10 K temperature drop.

3. After large changes of the level, the URV5 exhibits a slight delay caused by residual charge effects. This longer settling time must also be taken into account.

4. **All probes of the URV5 are referred to safety ground.**

5. **Measurements at low voltages**
(see also section 3: Maintenance)

   a) The URV5 features broadband RF measurements. If low voltages are to be measured, care must therefore be taken of (RF) interfering signals as may for instance occur with microprocessor-controlled AC calibrators or AF generators. The useful signal may partly be superimposed by a noise spectrum (a few MHz) from the microprocessor clock, which does not cause any interference in the AF range (→ 200 kHz), but invalidates the result of the broadband measurement with the URV5.

   Therefore it must be ensured that there is no such interference or that it is considered in the evaluation of the measurement result.

b) In the case of measurements on signal sources that are not referred to safety ground, interfering voltages may be caused by ground equalizing currents, which are added to the test voltage and thus also enter into the test result. This is particularly the case with poor plug-in and screw connections in the test line (Fig. 2-5).

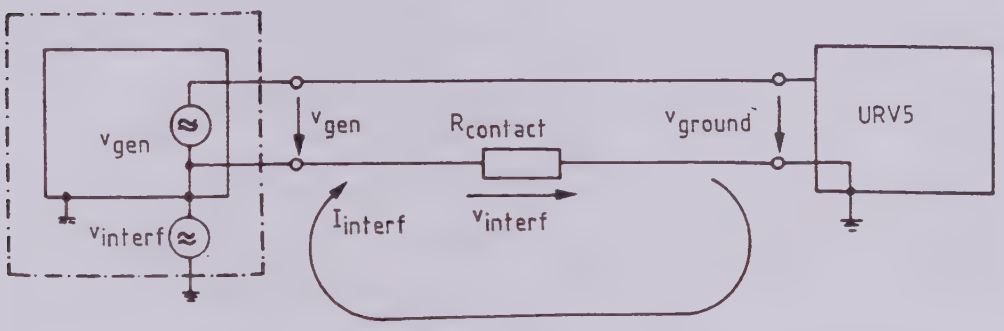

$V_{interf} = R_{contact} \cdot I_{interf}$

$V_{ground} = V_{gen} + V_{interf}$

Fig. 2-5 Interfering voltages caused by ground equalizing currents

2.3.2.2.2 RF Probe

In the frequency range up to about 200 MHz, the probe enables direct measurement on the circuit; care should be taken that the ground connection to the probe is short (e.g. ground sleeve with solder strip). The screw-on ground cable can only be used for measurements up to about 50 MHz, since due to the cable length the measuring error may unduly increase at higher frequencies.

The voltage measurement range with probe is 200 µV to 10 V. The maximum permissible AC voltage at the probe is V_{rms} = 15 V; any higher voltage will cause damage to the rectifier diodes. The voltage measurement range of the probe can be extended to 100 V or 1000 V by using the 20-dB or 40-dB divider recommended as an extra.

In measurements with probe and 40-dB divider, the maximum measurable voltage of V_{rms} = 1000 V must not be applied at frequencies above 100 MHz, since the divider would be damaged due to the dielectric loss of the divider capacitance. Between 100 MHz and 500 MHz the permissible voltage drops inversely with frequency from 1050 V to 210 V.

With the aid of the BNC adapter the probe may also be used for measurements on coaxial systems (frequency range 20 kHz to 500 MHz). Using the matching sleeve supplied with the equipment, the probe can also be inserted into the adapter with plugged-on divider.

When using the 40-dB divider (frequency range 1 to 500 MHz), the maximum measurable voltage is only limited by the permissible voltage (V_p = 500 V) and the power-handling capacity of the BNC connector cable. Table 2-1 shows the power-handling capacity of BNC cables and the voltages calculated from it as a function of frequency.

Table 2-1

f/MHz	1	10	100	200	500
P_{max}/W	1300	410	130	82	42
V_{rms}/V	225	143	81	64	45

For high-accuracy measurements on coaxial systems low-reflection insertion units are provided.

When using the 20/40-dB dividers, the division factor can be entered into the URV5 (ATT/dB) and upon switching on the ATT CORR function the readout is correctly referred to the input voltage (see section 2.3.5.3).

Up to frequencies of about 20 MHz the input impedance of the probe is equivalent to a capacitance of 2.5 pF shunted by an ohmic resistance whose value at room temperature is between 100 kΩ and 1 MΩ depending on the test voltage (guaranteed value up to 10 MHz > 80 kΩ at room temperature). At higher frequencies, the resistive component of the input impedance decreases as the square of the frequency due to the losses of the input capacity (Fig. 2-6).

Through the 20-dB divider the input capacitance is reduced to 1 pF, through the 40-dB divider to 0.5 pF. In the frequency range up to 20 MHz the resistive component of the input impedance is increased to a few MΩ through the 20-dB divider and to above 10 MΩ through the 40-dB divider. At higher frequencies the resistive component also decreases as the square of the frequency.

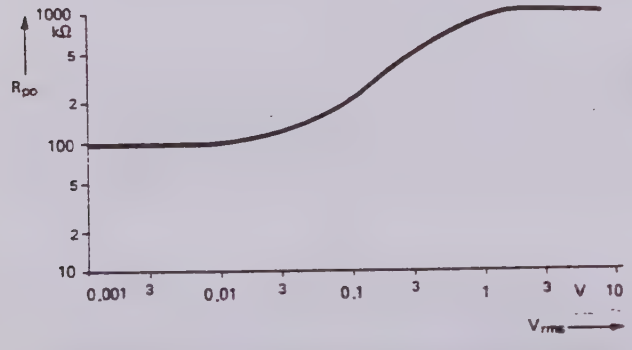

Input resistance R_{po} for f < 3 MHz as a typical function of the test voltage (sinewave).

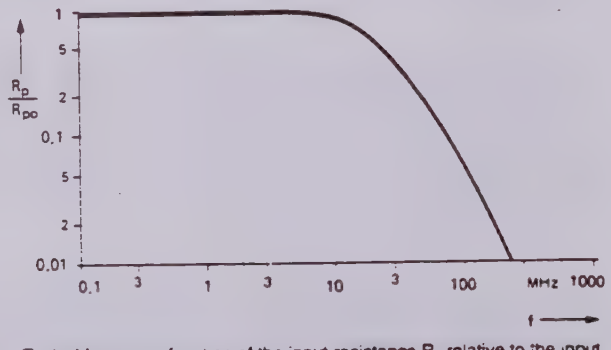

Typical frequency function of the input resistance R_p relative to the input resistance R_{po} at low frequencies.

Fig. 2-6 Input impedance of RF probe

Table 2-2 Overview of characteristic data of RF probe as well as of available dividers and adapters

	RF-probe	with 20-dB divider	with 40-dB divider	BNC adapter	50-Ω adapter	75-Ω adapter
Frequency range	20 kHz to 1 GHz	1 MHz to 500 MHz	0,5 MHz to 500 MHz (100 MHz)	20 kHz to 500 MHz	20 kHz to 1 GHz	20 kHz to 500 MHz
Voltage range	200 µV to 10 V	2 mV to 100 V	20 mV to 210 V (1000 V)	200 µV to 10 V	200 µV to 10 V	200 µV to 10 V
Input impedance C_{in} shunted by R	Fig. 2-6	1 pF >1 MΩ	0.5 pF >10 MΩ		50 Ω	75 Ω

For frequency response errors and reflection coefficients (50-Ω, 75-Ω adapter) please refer to the data sheet.

For measurements on 50-Ω and 75-Ω systems, the corresponding terminating adapters must be used.

The measuring accuracy can be improved in particular towards the upper frequency limit by entering the test frequency and switching on the FRQ CORR function (see section 2.3.5.4).

The frequency response correction curve of the RF probe is picked up by the 50-Ω adapter and is therefore also specified for this adapter.

When using other adapters or dividers and switching on the FRQ CORR function, this correction is only valid to a limited extent.

2.3.2.2.3 RF Insertion Units

Three insertion units with a characteristic impedance of 50 Ω or 75 Ω are available for the URV5. They are suitable for voltage measurements up to 10 V or 100 V. The attenuation factor of the 100-V insertion units is automatically taken into account by the URV5 and therefore need not be entered.

The low reflection coefficients of the 100-V insertion units are worth mentioning, since they render the insertion units particularly suitable for precision measurements on coaxial 50-Ω and 75-Ω systems.

Table 2-3 Overview of characteristic data of insertion units

	10-V insertion unit (50 Ω)	100-V insertion unit (50 Ω)	100-V insertion unit (75 Ω)
Frequency range	9 kHz to 2 GHz	100 kHz to 2 GHz	100 kHz to 2 GHz
Voltage range	200 µV to 10 V	2 mV to 100 V	2 mV to 100 V
Reflection coefficient r/%	up to 200 MHz 2	up to 1 GHz 2	up to 1 GHz 3

The measuring accuracy can be increased at the upper frequency limit by entering the test frequency and switching on the FRQ CORR function (see section 2.3.5.4 FRQ CORR).

2.3.2.2.4 Power Sensor

The power heads for the NRV can also be operated on the URV5.

2.3.3 Selection of Measurement Channel

The main measurement channel, from which the readout is derived, is selected by means of keys 17 (A) or (B). The other channel is designated as second channel and monitored in the background.

At the same time it is fixed for the operation of the instrument that all subsequent setting and input data only refer to the selected channel. In the case of dual-channel measurements (key 13 ΔEXT) the respective second channel is used for reference-value measurement.

Selected settings (e.g. ATT CORR, ΔINT, input data, etc.) are stored when changing the channel and are redisplayed by the LEDs on the display and in the keys when the original channel is switched on again.

If there is no probe in the selected measurement channel or if the probe is not properly inserted, the URV5 can be set and operated, but on the display 5 dashes (-----) will appear to indicate this status.

A probe is properly inserted if a measured value is indicated on the display.

2.3.4 ZERO Key (Zeroing)

Electrical zero need only be adjusted for voltage measurements in the most sensitive measurement range. This is necessary with all RF millivoltmeters using diode probes, since the detected output voltage of the probes may be less than 1 µV.

An interfering voltage at the input of the amplifier is added to the detected voltage and causes a reading error. Since the detected voltage of a diode detector is proportional to the square of the test voltage up to about 30 mV, the effect of this interfering voltage is dependent on the magnitude of the test voltage. Due to the square-law function, the readout voltage is

$$V_{readout} = \sqrt{V^2_{test} + V^2_{interf_{ext}} \pm V_{interf_{int}}}$$

$$\downarrow$$

$$V^2_{interf}$$

where V_{test} is the AC voltage to be measured and V_{interf} the reading on the meter without test voltage due to an inaccurate zero adjustment. An interfering voltage of, for instance, 100 µV causes an error of approx. 0.5% with a test voltage of 1 mV. Zeroing is therefore only required if voltages are to be measured in the most sensitive range, i.e. voltages up to about 10 mV (100 mV with 100-V insertion units, 20-dB divider; 1 V with 40-dB divider).

With the aid of this zero adjustment both low external interfering voltages ($V^2_{interf_{ext}}$) and internal offset voltages ($V_{interf_{int}}$) can be eliminated.

No voltage may be present at the measuring head (or at the probe). To avoid stray pickup, the probe should preferably be inserted into the BNC adapter.

The key ZERO functions as an on/off key.

Zeroing with a duration of

approx. 5 s for the measurement rates F1 to F5
approx. 20 s for the measurement rate FØ

takes place on enabling the function and is signalled by 4 dots on display.

The use of the 20-s zero adjustment for the measurement rate FØ permits an adjustment which is exactly matched to the measurement.
In the case of inaccurate zeroing (approx. >1 mV; 10 mV for the 100-V probe) OUT is displayed. Zeroing remains switched off.

Basically the following holds:

ZERO function off → key unlit
ZERO function on → key lit following a successful zeroing.

Note: The zero adjustment should improve the measuring accuracy. Therefore, the following should be observed:

1) Allow for a warm-up of the basic unit and the required probes, i.e. adaptation to the ambient temperature.

2) Make sure that no voltage is present at the probes. (The RF probe should be inserted into the BNC adapter.)

3) Do not carry out a zero adjustment immediately after the measurement of high levels, since recharging of the capacitances (residual charges) causes slight delaying effects.

4) Do not move the cables of the probes during the zero adjustment. (Low voltages may be induced in the test cable by bending, which may affect the accuracy of the zero adjustment).

The residual error after the zero adjustment is specified in the data sheet. For the RF probe and the 10-V insertion unit it is still 10 increments of the display at a test level of 500 µV (other conditions as stated in the data sheet).

Key 16 ZERO is not evaluated in DC measurements. This is shown by the indication "dc" on the display.

2.3.5 Readout of Measured Value (COMPUTE keys)

Due to the great variety of measurement evaluations, the result of a measurement can be read out in the basic units V, W, dBm, dBV and relative to a stored reference value or to the value measured in the second channel.

The exponent is displayed in steps of three according to the physical units.

The URV5 offers in addition two possibilities of correction evaluation. Firstly it is possible to connect an attenuator/amplifier which is considered in the measurement result (ATT CORR key) and secondly the frequency response of the probe can be corrected at a known frequency entered into the URV5 (FRQ CORR key).

2.3.5.1 Readout in V, W, dBm, dBV (ABSOLUTE)

For readout of the measurement result in the basic units V, W, dBm, dBV key 13 ABSOLUTE must first be pressed. The units are then selected by means of the key SEL DIM. The measured value is cyclically read out in the units V, W, dBm, dBV. The indicated values are evaluated according to the following equations:

$$Ind_V = V_{test}$$

$$Ind_W = \frac{V^2_{test}}{Z}$$

$$Ind_{dBm} = 10 \log \left| \frac{P(V_{test}, Z)}{1\ mW} \right|$$

$$Ind_{dBV} = 20 \log \left| \frac{V_{test}}{1\ V} \right|$$

Ind $\hat{=}$ indicated value
V_{test} $\hat{=}$ test voltage
Z $\hat{=}$ reference impedance

The key 11 SEL REL is inhibited and not evaluated.

2.3.5.2 Relative Readout (Δ, Δ%, ΔdB, X/REF, with ΔINT, ΔEXT)

With the aid of the relative functions, the measured value can be displayed relative to a reference value.

Relative evaluation can be made in four different ways:

- Difference between measured value and reference value,
- deviation in per cent or as logarithmic value,
- quotient of measured and reference value.

For readout of the measurement result in the relative units Δ, Δ%, ΔdB, X/REF one of the two keys 13 ΔINT or ΔEXT must be pressed first. The relative units are then selected by means of key 11 SEL REL. The measured value is cyclically read out in the units Δ, Δ%, ΔdB, X/REF.

In particular, the following applies:

dBm (absolute) → [Rel] → W (relative)

dBV (absolute) → [Rel] → V (relative)

(Rel = key ΔINT, ΔEXT)

The absolute units V, W are selected as described above by means of key 11 SEL DIM. The reference value to be used for the relative evaluation is determined by means of keys 13 ΔINT or ΔEXT. With ΔINT, the reference value internally stored for the selected measurement channel, with ΔEXT the value measured in the second channel (after preevaluation according to the basic unit) is used as reference value for the evaluation.

The reference value (with ΔINT) can be entered by means of the keys according to the blue key labelling (SHIFT) in V, W, dBm, dBV (DIM) and indicated by means of key 12 RCL INP (see section 2.3.5.6. Indication of Reference Values, and section 2.3.9.1 Entry of Reference Values).

Any measured value (of the main measurement channel) can also be used as reference value. (Key sequence: 8 SHIFT - 6 STO).

With ΔEXT setting, the value measured in the second channel can be stored into the internal reference value register of the main measurement channel. For this purpose key 12 RCL must be pressed. On the display, the measured value of the second channel will be indicated, the LED REF is flashing. The measured value is stored as above with the keys operated in the sequence 8 SHIFT - 6 STO) (see also section 2.3.9.2).

For measurements referred to this one value as a constant, the setting ΔINT can then also be selected.

If only one probe is inserted or the probe of the second channel is not properly inserted,

will be indicated on the display when actuating the key ΔEXT. URV5 returns to the original setting. Only when both probes have been correctly inserted, the URV5 can be set as desired.

The indicated value is evaluated according to the following equations:

$$Ind_{\Delta} = X_{meas} - X_{REF}$$

$$Ind_{\Delta dB} = 20 \log \left| \frac{X_{meas}}{X_{REF}} \right| \quad \text{or} \quad Ind_{\Delta dB/W} = 10 \log \left| \frac{P_{meas}}{P_{REF}} \right|$$

$$Ind_{\Delta \%} = 100 \frac{X_{meas} - X_{REF}}{X_{REF}} \qquad \text{for } Z_A \neq Z_B \text{ at } \Delta \text{ EXT}$$

$$Ind_{X/REF} = \frac{X_{meas}}{X_{REF}}$$

where Ind $\hat{=}$ indicated value

X_{meas} $\hat{=}$ measured value according to basic unit (V, W)

X_{REF} $\hat{=}$ reference value according to basic unit.
(The input unit is converted automatically.)
with ΔINT: internally stored reference value
with ΔEXT: measured value of second channel

Example:

V = 10.000 V (4 1/2 digit readout, 3 decimal places)
reference value X_{REF} = 9.912 V

The indicated values computed according to the above equations are

Ind_{Δ} = .088 (3 decimal places according to measured value)

$Ind_{\Delta dB}$ = .08 dB

$Ind_{\Delta\%}$ = .88%

$Ind_{X/REF}$ = 1.0088 (maximum resolution)

In the V and ΔLIN modes, the resolution of the readout is determined by the number of decimal places of the measured value (dependent on measurement rate - 3 1/2 to 4 1/2 digits - and measurement range). The reference value is matched during evaluation.

The resolution for the Δ% display mode is 0.01 % for readout values of < 200% and always 0.01 dB for the ΔdB mode.

The other cases, the resolution of the readout is not fixed and an exponent can be output in steps of three.

A flashing indication of ±19999 or ±19999 x $10^{\pm 19}$ means the display range has been exceeded.

2.3.5.3 ATT CORR Key

The URV5 offers the user the possibility of connecting an attenuator or amplifier between measurement source and measuring instrument, which will be considered in the calculation for the measured value display.

The ATT CORR. key 14 must be pressed for this purpose. If the LED in the key lights, the voltage present at the probe is corrected by the previously entered attenuation or amplification factor (negative sign).

Like all other inputs, the correction factor is entered via the secondary function level of the key (selection of input parameter by means of key 12 INP) and must be made in dB.

This correction is however only necessary if additional attenuators or amplifiers are connected between measuring head and test item and if these are then to be considered in the readout value. The level ranges of the various probes are automatically taken into account.

Example: $V_{readout} = 3.127 \times 10^{-3}$ V without correction

(1) ATT/dB = 20 dB

$\Longrightarrow V_{readout} = 31.27 \times 10^{-3}$ V with correction 1

(2) ATT/dB = -20 dB

$\Longrightarrow V_{readout} = .3127 \times 10^{-3}$ V with correction 2

2.3.5.4 FRQ CORR Key

In particular towards to specified frequency range limits the probes exhibit a frequency response error, which is specified as maximum permissible error. For precise measurements this is however often not satisfactory. Therefore, the frequency response has been individually measured for each probe during the production and together with the other probe data stored in the non-volatile memory of the plug-in adapter.

There is no automatic evaluation of this frequency response curve, since the URV5 does not include a frequency meter.

The user can correct the frequency response at a certain frequency with the aid of the correction curve stored in the plug-in adapter by entering the test frequency (selection of input parameter by means of key 12 INP, secondary function) and pressing key 14 FRQ CORR.

If the LED in key 14 FRQ CORR lights, the voltage present at the probe is corrected according to the frequency entered and the associated correction value. This operating mode is only useful if the frequency of the signal to be measured is known and a result is desired which is to be within the narrower error limits (see also data sheet and section 2.3.2 Probes).

Example:

test frequency:	300 MHz
probe:	10-V insertion unit
measurement error:	5% without correction
measurement error:	3% with correction

i.e. at this frequency the measurement error is reduced to about 1/2.

This function is inhibited for DC measurements!

Note: This frequency response correction is a numerical correction, for which it is absolutely necessary that the actual test frequency and the frequency entered into the URV5 agree.

This correction should therefore be used with care, since otherwise it may well have the opposite effect of improving the results.

2.3.5.5 COMP OFF Key

This is an auxiliary key which (in measurement mode) cancels all settings made with the aid of the COMPUTE keys - the URV5 being then set to ABSOLUTE with readout in V - or (in recall mode: RCL INP) causes the URV5 to leave this mode and to return to the measurement mode (all other settings being preserved).

2.3.5.6 Display of Stored Reference, Correction and Impedance Values (RCL INP key)

With the aid of key 12 RCL INP the internally stored input values can be displayed instead of the measured value.

This key is a stepping key, i.e. when it is pressed again, the next input value will be displayed (corresponding to LED display 1). The reference value, the correction values (frequency and attenuation) and the reference impedance can thus cyclically be indicated and checked. Another function of this key is switchover to the measurement mode, i.e. after indication of the reference impedance and pressing key 12 RCL INP the URV5 returns to the measurement mode.

Return to the initial display of the measured value is however also possible by means of keys 17 (A or B) for channel selection, or key 15 COMP OFF. In both cases the URV5 returns to the previously selected measurement function and display mode (channel A/B, ΔINT/ΔEXT etc.).

A new setting is also possible with the aid of keys 13 and 14 (ABSOLUTE, ΔINT, ΔEXT, CORR), keys 11 SEL DIM, SEL REL, 16 ZERO will however not be evaluated in the recall mode.

The secondary function level for correction of the indicated value can be selected by means of key 8 INPUT/SHIFT. Input parameters (REF, FRQ, ATT, Z) and units for REF (V, W, dBm ,dBV) as well as the indicated value are preserved and can separately be changed or corrected (see section 2.3.9.1).

Note for ΔEXT. setting:

Since in case of dual-channel measurement the reference value stored in the unit is of secondary importance, the value measured in the second channel is indicated first in this mode when the recall function (RCL INP) is called up. This is shown by flashing of the LED REF on display 1. If key 12 RCL INP is pressed again, the internally stored reference value is indicated next. Further operation is as described above.

2.3.6 PEAK (PEP) Key

The URV5 can measure the peak value of a modulated AC voltage present at the probe. The measured value is read out as an rms value.

The abbreviation PEP (= peak envelope power) is used in transmitter measurements and stands for the true power during one period of the carrier signal at the maximum momentary value of the modulation signal.

Therefore, the measured value ist read out in W when this function is switched on (LED in PEAK (PEP) key lights). The impedance value entered for the respective measurement channel is used as reference impedance. It is also possible to select another display mode by means of keys 11 SEL DIM and SEL REL. The measured value is however always read out as rms value of the peak value.

The gate time effective for PEAK measurement can be adjusted with the aid of the FILTER key and via the special function 3 as described in section 2.3.8 and basically corresponds to the measurement time (see Table 2-5). The gate time is the period of observation during which the peak value is determined and is followed by an automatic restart (internal reset of the peak-responding meter). Thus the gate time must be greater than the period of the measured signal.

This function is not effective for DC measurements (DC probe) and the key is not evaluated when actuated.

Table 2-5 ☐ - setting with FILTER key (F2/F4)

FØ	F1	F2	F3	F4	F5	← gate time (filter) setting
0.05/s	0.25/s	1/s	3.3/s	7/s	15/s	← display change
20 s	4.0 s	1 s	200 ms	40 ms	10ms	← gate time
20 s	4.1 s	1.1 s	300 ms	140 ms	60ms	← measurement time

(For dual-channel operation, the indicated measurement times are twice as long.)

Generally, the following instructions and restrictions must be observed for this measurement mode:

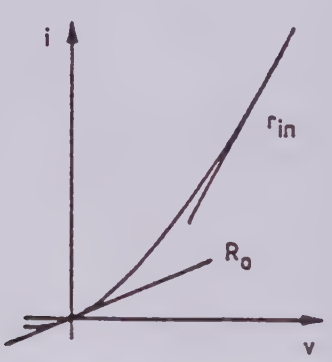

Diode characteristic

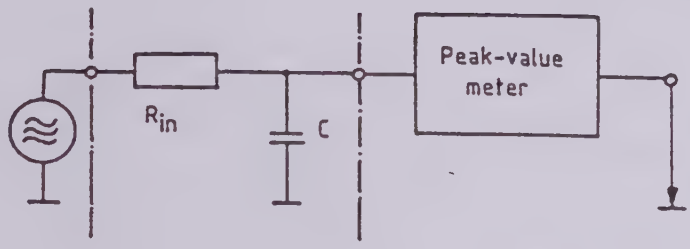

Probe

Fig. 2-7 Equivalent circuit diagram for peak-value measurement

As shown in Fig. 2-7, the internal resistance R_{in} of the measuring head diode forms in conjuction with the charging capacitor C a lowpass filter, with a level-dependent frequency response caused by R_{in}. Within the square-law range of the diode characteristic, the limit frequency (3 dB) is approx. 800 Hz for both insertion units (10 V, 100 V) and the RF probe. Since R_{in} is also temperature-dependent, this value is only valid at room temperature ($R_{in} \approx R_0$ (zero-point resistance) ≈200 kΩ).

At higher levels, measurements are possible with modulation and intermodulation frequencies up to the kHz range.

Definition of PEAK (PEP) measurement with respect to general measuring head characteristics

1. **Unmodulated RF voltages:**

   With unmodulated RF voltages there are no or only slight differences in the result from a "normal" measurement and a PEAK (PEP) measurement. Minor deviations are due to a residual ripple of the RF voltage.

   Basic measuring head characteristics (see Section 2.3.2.2) are as follows:

   < 30 mV (300 mV) rms-responding meas.
   > 1 V (10 V) peak-responding meas.
   } for non-sinewave voltages

The values given in parenthesis apply to 100-V insertion units.

2. Modulated RF voltages:

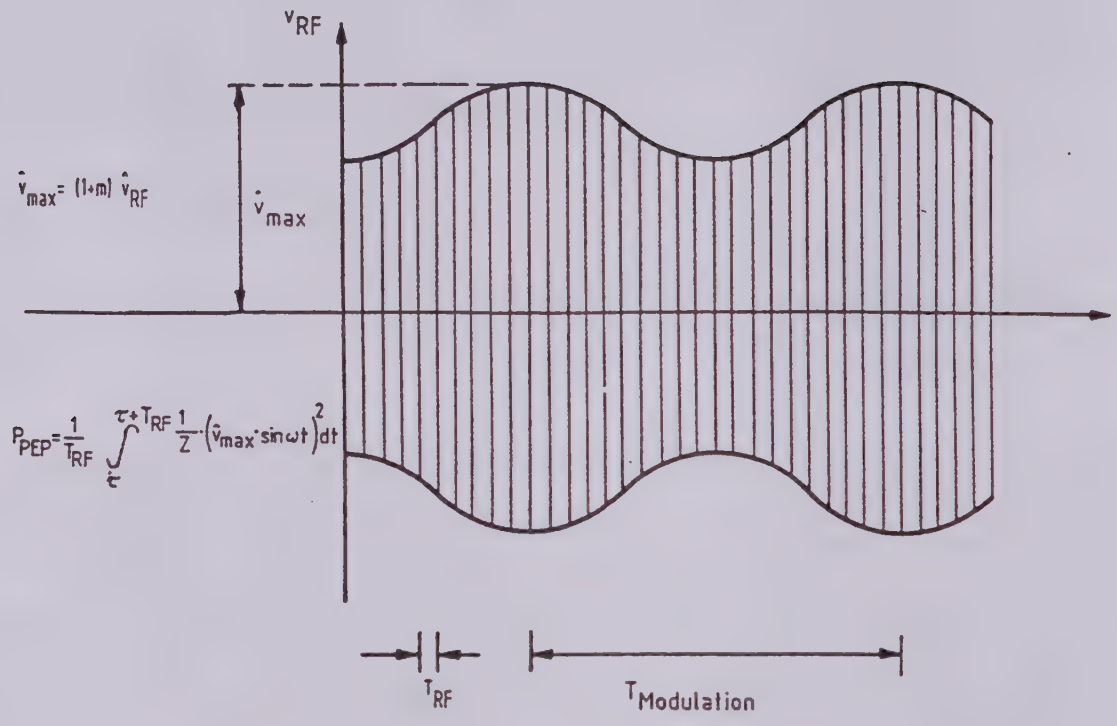

Fig. 2-8 Amplitude-modulated RF voltage

- PEAK (PEP) measurement (< 100 Hz)

  The PEAK (PEP) measurement can always be carried out up to modulation frequencies of about 100 Hz without causing a significant additional error.

  This holds true for any permissible input voltage.

- PEAK (PEP) measurement (> 100 Hz, < 1 V (10 V))

  At higher modulation frequencies, a value is obtained which is between the true rms (peak) value and the "normal" rms (average) value depending on the modulation frequency

- Measuring head characteristic

  At voltages > 1 V (10 V), the influence of the measuring head characteristic is predominant so that there is only little difference from the PEAK (PEP) measurement.

- Note for pulse modulation:

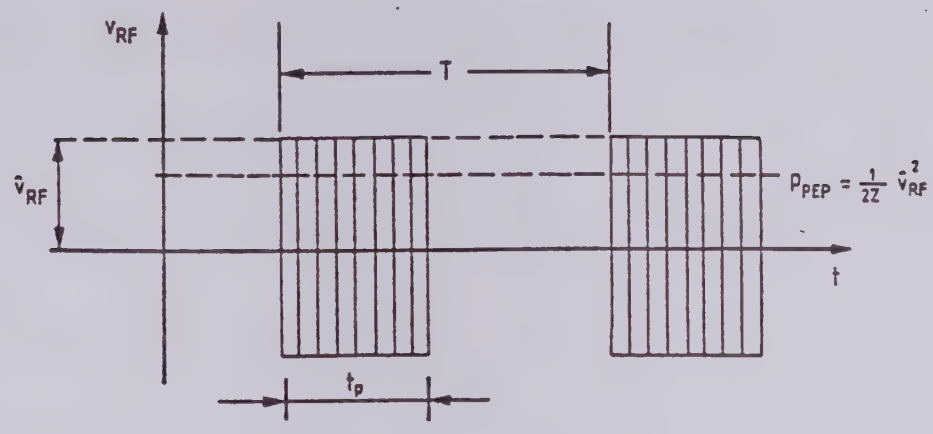

Fig. 2-9 Pulse-modulated RF voltage

The typical measuring error of pulse-modulated RF voltages at room temperature can be taken from Fig. 2-10. The curves shown apply to tp < T. The error decreases as tp → T.

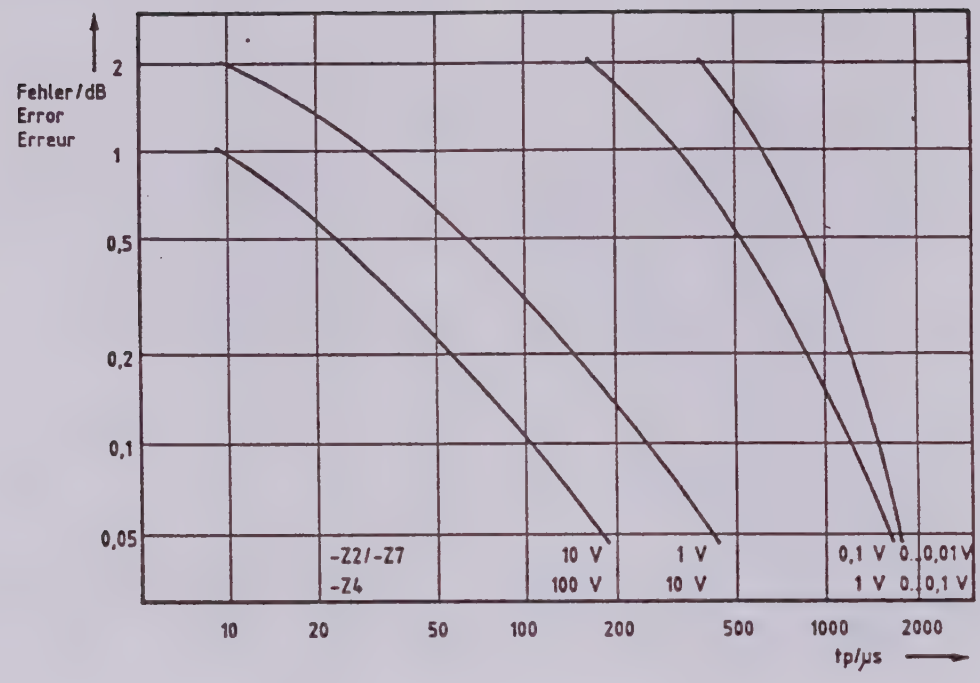

Fig. 2-10 Weighting error of PEAK(PEP) measurements for pulse-modulated RF with the use of URV5-Z2/-Z4/-Z7 as a function of the readout value.

2.3.7 Switching off Autoranging and Selection of a Measurement Range

The URV5 has a rapid automatic range selection facility, the switching speed of the autoranging circuit being matched to the selected measurement speed. During autoranging the display is blanked. The value indicated next is a valid measured value in the correct measurement range.

In some cases it may be advisable to switch off autoranging and to select a fixed measurement range.

Switchover between autoranging and fixed range setting can be made by means of key 9 AUTO RANGE, the automatically selected range being fixed by Range Hold.

The LED in key 9 AUTO RANGE lights when autoranging is operative.

The URV5 has another two keys 9 (UP↑, DOWN↓) which permit the automatically or manually selected range to be shifted by one range up or down. If this is possible, the URV5 briefly indicates the newly selected range on half the display size (e.g. 10^{-3}, 100^{-3}, 1 etc.). Autoranging is switched off if one of these keys is pressed (LED in key 9 AUTO RANGE goes out).

Holding an automatically selected range by pressing one of the three keys is advisable, for instance, if the input voltage is briefly removed and unnecessary switchover to the most sensitive measurement range is to be avoided.

It should particularly be noted that the range hold function only fixes a lower limit which will be retained in all cases. An overranging in the range hold mode, i.e. if the measured value is more than 22% above the nominal value of the selected range, will cause the URV5 to leave this range and to switch to the higher range in accordance with the input parameter. The entire display is then flashing.

After the overrange the instrument returns to the previously selected range.

Table 2-6 Nominal values in measurement ranges of probes

Range \ Probe	DC Probe	RF probe 10-V insertion unit	100-V insertion unit
1	1 V	10 mV	100 mV
2	10 V	100 mV	1 V
3	100 V	1 V	10 V
4	400 V	10 V	100 V

2.3.8 Measurement Speed (FILTER Key)

For optimum matching to an existing measurement system the URV5 features six measurement speeds (FØ to F5) which can be selected via the special function 3 (section 2.3.10).

With the aid of the FILTER key, the two most important measurement speeds can be selected (F2/F4).

The LED in key 7 lights when F2 or FØ, F1 is selected.

In Table 2-7 the display rates and measuring times for manual and computer operation are stated. The data for the manual operation are to be understood so that for instance at FØ there are two display changes per second, but the display is settled only after 16 s (like with computer operation).

The values given are merely guidelines and vary from probe to probe.

Table 2-7 [ ] - setting with FILTER key (F2/F4)

FØ	F1	[F2]	F3	[F4]	F5	← filter
2/s	2/s	4/s	4/s	10/s	30/s	← display change
16 s	4 s	1 s	260 ms	80 ms	35ms	← measuring time with computer operation

Measurement speed for AC measurement

FØ	F1	[F2]	F3	[F4]	F5	← filter
2.5/s	2.5/s	5/s	5/s	15/s	50/s	← display change
12 s	3 s	750 ms	180 ms	55 ms	20 ms	← measuring time with computer operation

Measurement speed for DC measurement

At the measurement speeds F4 or F5 there is only one measurement cycle, whereas at the other speeds F3 to FØ averaging over four measurement cycles takes place from step to step. With the settings FØ to F4 the A/D conversion time is 20 ms, the measured value being read out (unit V) in 4 1/2 digits, with setting F5 being the fastest mode of the URV5 the A/D conversion time is 2 ms and the measured value is read out in 3 1/2 digits.

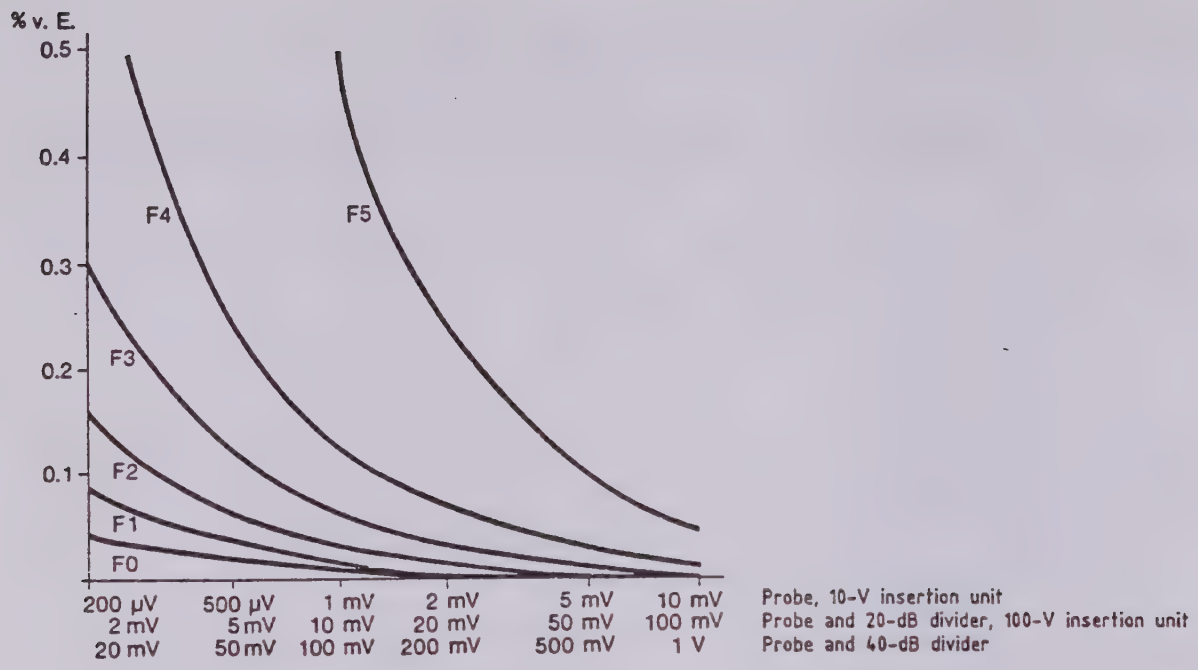

Fig. 2-11 Display noise

The display noise increases with the speed of the measurement.

Fig. 2-11 shows a group of typical curves for the various RF probes and insertion units.

2.3.9 Secondary Function Level

The secondary function level of the keyboard - blue markings on the keys - is used for entering data, such as reference value for relative value indication, correction values and for calling up the special functions (key 7 SPEC), e.g. calibration or input of the IEC-bus address. Switchover between the two function levels is effected by means of key 8 SHIFT, whose LED lights when the secondary functions are activated, while the LEDs in all other keys - except for the LEDs indicating the selected channel - go out. The measured value indicated last remains in the display. During the entry the entire measurement section of the instrument operates as usual and autoranging also remains operative.

If prior to the switchover to the secondary function level a reference or correction value has been indicated, the entered unit and the value remain in the display for correction.

2.3.9.1 Input of Reference Value, Correction Values or Impedance

For relative value indication the URV5 requires a reference value, for W/dBm evaluation a reference impedance and for correction a correction value. Therefore, the reference value, correction values and the reference impedance can be entered and stored for each channel separately. The channel must be preselected in the measurement mode (keys 17 A or B). The values entered are stored by means of key 6 STO.

When the instrument is switched off, the entire memory content is lost, but with the aid of the special function 2 the content can be written into a non-volatile EPROM. The values stored in the EPROM are then used as initialization values when the instrument is switched on.

For entering the desired value which is then displayed, the keys are used according to their blue markings.

The value is entered as a number with decimal point. The URV5 accepts numbers and points only as long as the scale length is not exceeded and the value can be displayed. The polarity sign may be changed as required during the entry.

Switchover for exponent input is made by means of key 11 EXP; the currently indicated exponent is erased.

The subsequently entered number(s) and the polarity sign are taken as entry data for the exponent. When key 11 EXP is pressed again, only the exponent is erased and can then be newly entered.

The unit of the reference value can be selected with key 11 DIM, by means of which the units V, W, dBm, dBV are cyclically changed. Similar to the arbitrary change of the sign during the entry, the DIM key may be pressed any time.

Key 12 INP is provided for selecting the input parameter (REF, FRQ, ATT, Z). Since upon entry of FRQ, ATT, Z the DIM units cannot be changed, key 11 DIM will not be evaluated in these cases. No LED lights on display 3.

An incorrect entry can be erased by means of key 10 CLEAR. The entire numerical value with the exponent and the sign are erased, not however the selected input parameter/unit.

With the aid of key 6 STO the currently displayed value is stored into the respective register for the input parameters (selected with key 12 INP). During this transfer the value is checked for acceptability and adherence to certain limit values. Not allowed are for instance negative impedances (see Table 2-8). In case of an error, the word

is displayed on the URV5 and the instrument returns to the entry mode for correction.

Table 2-8 Limits of input parameters

REF	V	$\pm\ 1 \cdot 10^{\pm 9}$
	W	$+\ 1 \cdot 10^{\pm 12}$
	dBm	$\pm$ 199.99
	dBV	$\pm$ 199.99
FRQ		$+\ 1 \cdot 10^{\pm 12}$ excl. Ø
ATT		$\pm$ 199.99
Z		$+\ 1 \cdot 10^{\pm 4}$ excl. Ø

2.3.9.2 Use of Measured Values as Reference Values

It is also possible to use measured values as reference values (sequence of keys to be actuated: 8 SHIFT - 6 STO). The following should be noted: the URV5 transfers the measured value into the memory. If the URV5 has not been in the compute mode before key 8 SHIFT is actuated, the value read out on the display is directly entered into the reference value register. If the URV5 was however in the compute mode, not the displayed value but the actual measured value will be stored. After return to the measurement mode, the new value Ø is displayed for the functions ΔLIN, Δ%, ΔdB and the value 1 for the function X/REF.

Example of relative value indication Δ%:

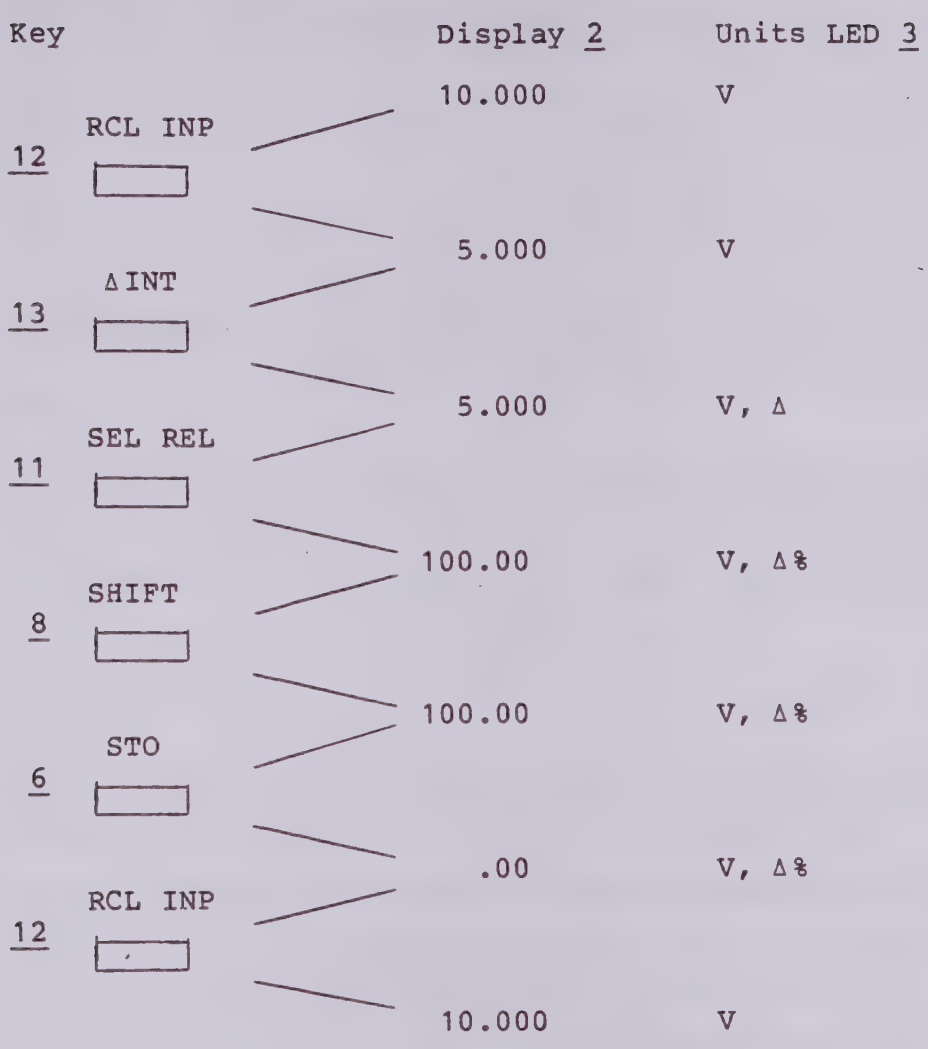

A special feature is the use of a measured value of the second channel as reference value for the main measurement channel.

This is only possible with the setting ΔEXT.

For this purpose key 12 RCL INP must be pressed. The measured value of the second channel is then displayed. This is shown by flashing of the LED 1 REF. For use of this value as reference value, proceed as described above, i.e. the keys must be actuated in sequence 8 SHIFT - 6 STO.

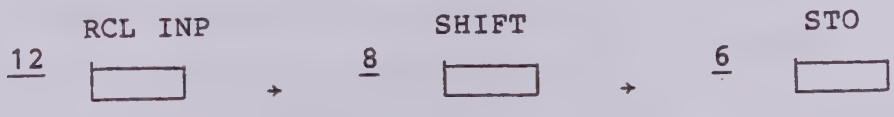

When the setting is changed from ΔEXT to ΔINT, this stored measurement value is used for relative-value indication in subsequent measurements.

2.3.9.3 Calling up of Special Function Level

The special function level can only be called up at the secondary function level by means of key 7 SPEC. The display shows the word

Further instrument functions are now available which can be activated by pressing the numerical keys or the CLEAR key.

2.3.10 Special Function Level

The special functions of the URV5 are rarely required and therefore do not have an own key. They can be called up as described in section 2.3.9.3.

Table 2-9 Special functions

Code	Function
Ø	Display test
1	Input of address for IEC-bus operation
2	Storage of input values in EEPROM as initializing values for switch-on
3	Measurement speed FØ to F5
4	Display of calibration date (link X6 removed) Calling up of calibration routines (link X6 inserted)
5	Calling up of last error code
6	Checksum for individual EPROMs
7	Copying input values of main measurement channel to second channel channel A: A-A (channel B same values as channel A) channel B: B-B (channel A same values as channel B)
CLEAR	Error message: erasure of error message No error message: resetting of instrument

Special function Ø is an LED test which causes all display elements including the keys to light up for about 3 s. The instrument then returns to the measurement mode.

Special function 1 permits to enter the IEC-bus address or to select the talk-only mode of the IEC-bus interface (see section 2.4.2).

Since the URV5 uses as non-volatile memory a PROM (EEPROM) that can be electrically erased but not be overwritten indefinitely, the current reference values can be stored into this EEPROM with the aid of **special function 2.** When switched on, the URV5 is initialized in accordance with these stored values. After execution of the routine the instrument returns to the measurement mode.

Special function 3 permits selection of six measurement speeds (Ø to 5) for the URV5 (see also section 2.3.8 Measurement Speed). After calling up this function

is for instance shown on the display, the figure 4 being the currently valid setting of the measurement speed.

Now one of the figure keys Ø to 5, the CLEAR or SPEC key can be pressed.

Ø to 5: new setting of measurement speed
and display for about 0.5 s

CLEAR: clear display

SPEC : return to special function level (SPEC)

SHIFT: return to measurement mode

Special function 4 operates in two different ways. Normally, the calibration routines that can be called up with this special function are inhibited. Therefore, the date and a letter for identifying the set of calibration values are displayed.

Example:

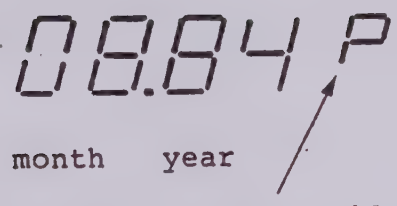

month year

Code, identifying that the measurement function has not been completely calibrated at the date stated.

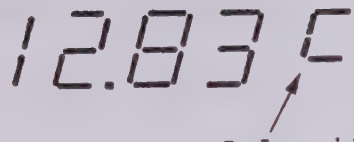

Code, identifying that the measurement function has been completely and properly calibrated.

In manual operation the inhibition (only required in manual operation) can be eliminated by fitting link X6 on the computer board.

is then read out on the display.

Further routines are now available which permit the URV5 basic unit to be calibrated simply by connecting a calibration standard and by pressing a key.

Special function 5 can be used to redisplay an error message that has already been erased.

Special function 6 can be used to display the checksums of the individual EPROMs of the program memory. The respective EPROM is identified by the figure 1 or 2 on the exponent display 2. The checksum is the sum of all bytes of the EPROM without a carry bit.

Special function 7 permits all input values that have been entered for the switched-on main measurement channel to be used as input values for the second measurement channel.

Example: channel B switched on (LED in key 17 B lights)

```
REF-INPUT VALUES    URV5

REFV   A 1.0000E+00
FRQMHZ A 1.0000E+06
ATTDB  A    .00E+00
Z  OHM A  50.00E+00
REFV   B     0.E+00
FRQMHZ B  .2000E+09
ATTDB  B  20.00E+00
Z  OHM B 100.00E+00
```

input values prior to calling up SPEC 7

Sequence of keys to be actuated:
8 SHIFT, 7 SPEC, 17 7

The display reads out

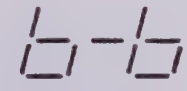

```
REF-INPUT VALUES    URV5

REFV   A     0.E+00
FRQMHZ A  .2000E+09
ATTDB  A  20.00E+00
Z  OHM A 100.00E+00
REFV   B     0.E+00
FRQMHZ B  .2000E+09
ATTDB  B  20.00E+00
Z  OHM B 100.00E+00
```

input values after calling up SPEC 7

Special function CLEAR comprises two functions. If no error message had been displayed on the URV5, the instrument is reset according to section 2.3.11 by calling up this special function. The input values will not be reinitialized. If there is an error message, this will be erased and the instrument returns to the measurement mode. The URV5 can be operated normally until a new error is detected.

2.3.11 Basic setting

The URV5 is either set automatically when it is switched on or by means of the special function CLEAR (no error message). Reference values are only initialized when the instrument is switched on.

Basic setting:

Measurement channel	channel A or channel B if a probe is only inserted
Unit	ABSOLUTE, V (or W for power head for NRV)
Measurement speed	F2 (SLOW)
Auroranging	switched on

Note for IEC-bus operation:

The basic setting with IEC-bus operation corresponds to the IEC-bus commands:

PA (PB), EØ, F2, KAØ, KFØ, OØ, RGØ, UØ__(U7__), (HØ, NØ, QØ, W3, Y1 additionally).

This can be achieved by sending the device-specific command C1 or by means of the universal commands DCL (device clear) or SDC (selected device clear).

2.3.12 Error Messages

Error messages of the URV5 are indicated to the user by

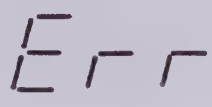

or

followed by a 3-digit hexadecimal figure.

The "Err" message is briefly indicated and means incorrect data input as described in section 2.3 and 2.4.2. The URV5 then returns to the input mode.

The indication of "E" followed by a hexadecimal figure means an error in the hardware functions. Each hexadecimal figure stands for four different causes of error.

Example:

means faulty calibration.

Clearing the error message:
An error message can be erased by calling up the special function CLEAR or the special function 4 (calibration) until a new error is detected. In the calibration mode the error message can be directly erased by means of the CLEAR key (secondary function).

Interruption of error message:
If a reference value is indicated (key 12 RCL INP) or the secondary function level is selected (key 8 SHIFT), the error message is interrupted and only reappears after switchover to the measurement mode. See also section 2.4.5 (IEC-bus operation).

Table 2-10 Errors in hardware functions

Error message	Cause
EØØ1	Stored initializing data (EEPROM) for reference/correction values are missing or incorrect (switch-on test)
EØØ2	Stored IEC-bus address (EEPROM) is missing or incorrect (switch-on test)
EØØ4	Calibration measurement out of tolerance
EØØ8	Fault in IEC-bus interface (actual state ≠ nominal state)
EØ1Ø	Stored correction factors (EEPROM) are missing or incorrect (switch-on test)
EØ2Ø	Probe data missing or erroneous
EØ4Ø	Stored correction factor (EEPROM) for current measurement range is missing or incorrect (check in case of range switchover)
EØ8Ø	Writing into EEPROM is not possible
E1ØØ	A/D converter faulty
E2ØØ	Incorrect internal zero adjustment (cyclic)
E4ØØ	Temperature measurement incorrect
E8ØØ	--

If several errors occur simultaneously, the corresponding error messages are added hexadecimally.

e.g.: EØØ8 and EØØ4 = EØØC
EØØ1 and EØØ2 = EØØ3

For further instructions, in particular measures for eliminating the faults, see section 3.

2.4 IEC-bus Control of URV5

The URV5 is fitted with a remote-control interface to IEC-Publ. 625-1 and can thus be connected to a data bus system for the transfer of setting data and measured values, i.e. to an IEC bus. All functions of the URV5 can be remote-controlled. The connection is provided on the rear panel of the instrument (Fig. 2.2).

The specific characteristics of the IEC-bus interface (control lines, handshake lines, data lines) and the timing of the data transfer can be taken from the respective standard specifications. The characters of the ASCII code used for the transfer are shown in Table 2-23.

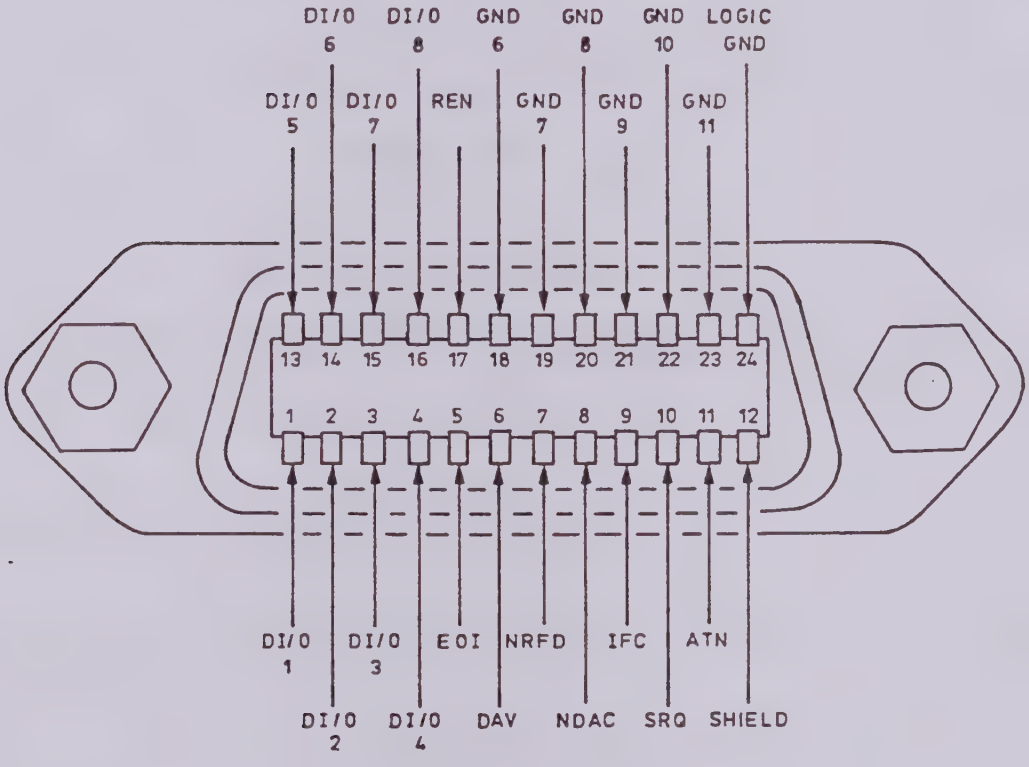

Fig. 2-12 Pin assignment of female connector 22

2.4.1 Interface Functions

The URV5 is designed for the following interface functions:

SH1	Source Handshake function full capability
AH1	Acceptor Handshake function full capability
T5	Talker function Capability for answering to serial poll, unaddressing if MLA, talk-only mode.
L4	Listener function Unaddressing if MTA
SR1	Service Request function full capability
RL1	Remote/Local function full capability
DC1	Device Clear function full capability
DT1	Device Trigger function full capability
PP1	Parallel Poll function Remote-controlled setting

2.4.2 Setting of Device Address/Talk-Only Mode

The device address of the URV5 is set via the keyboard and stored in an electrically erasable PROM ensuring non-volatile storage after the instrument is switched off. Special function 1 is used for this purpose.

> The current IEC-bus address can be displayed in the local mode for about 1 s by pressing the LOCAL/TALK key. (There will be no display in the talk-only mode!)

This special function 1 is called up by pressing the key 8 SHIFT followed by key 7 SPEC.

appears on the display, and after pressing the figure key 1

e.g.

figure 9 being the currently set device address.

For a further input, i.e. when changing the device address for IEC-bus operation, the blue markings of the keys are relevant, the keys DIM, +/- and SPEC having no significance, i.e. the instrument does not respond when these keys are pressed.

After calling-up of special function 1 or after an indicated input error (Err), one or two figures can be entered as new IEC-bus address without actuating the CLEAR key.

The 1st figure appears in the last but one place of the digital readout, in the last place a bar is displayed for identification of a further input

e.g.

≙ address 2

This bar will be overwritten if a second optional figure is entered.

e.g.

≙ address 27

Values between Ø (ØØ) and 30 are permissible. If 31 is entered, it will be interpreted as talk-only mode in the memory and the interface will be initialized accordingly. If values > 31 are entered and key 6 "STO" is pressed,

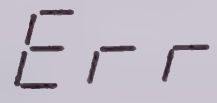

is displayed for an input error and the instrument returns to special function 1, indicating the incorrect value.

Key 9 "·/to" is used for direct entry of the talk-only mode and is accepted any time.

appears on the display.

The indicated address can be erased by means of key 10 CLEAR so that a new address can be entered. For each figure to be entered a bar is then displayed:

Further entry as described above.

Key 6 STO is used for storing the entered and indicated address as well as for subsequent initialization of the IEC-bus interface. This is shown by brief flashing of the display and indication of the new value in accordance with the initializing value.

If prior to actuating the STO key the input has been in CLEAR mode, the original address is preserved. With values > 31 an error message will be output as described above and the instrument returns to special function 1.

When the URV5 is switched on, the stored IEC-bus address is read in, displayed and the IEC-bus interface is initialized accordingly.

With the aid of key 8 SHIFT the special function 1 can be left without changing the set device address irrespective of the displayed value.

2.4.2.1 Inserting/Removing a Probe during IEC-bus Operation (Remote Mode)

The probes should only be inserted into the basic unit in local mode, since in this case the probe data will subsequently be evaluated.

Inserting a probe in remote mode:

When a probe is inserted into the basic unit in the remote mode, this is recognized by a process controller only if the interface has been set (Q1 to Q3). The URV5 sends SRQ (114). With the aid of command CØ the process controller can initialize the reading in of the probe data. To signal the initialization of the probe data, the caption "init" appears in the display.

Removing a probe in remote mode:

When a probe is removed from the basic unit in remote mode, this will cause abortion of a current measurement if

1. the probe has been inserted in the main measurement channel (selected with PA or PB), or

2. if one of the two probes is removed in dual-channel measurement mode (trigger: X8, ΔEXT: U3X to U6X).

Following the removal of a probe and with interface setting Q to Q3, the URV5 always sends an SRQ (104).

2.4.3 Device-specific IEC-bus Commands

These commands can be subdivided into six groups:

1. Input pointer (Table 2-11)

2. Setting commands (Table 2-12)
   They cause setting of the measurement and evaluation section without starting a measurement.
   Example: setting of measurement range.

3. Data input commands (Table 2-13)
   They permit entry of reference values, correction values and impedance.

4. Interface commands (Table 2-14)
   They cause setting of the IEC-bus interface.
   Example: selection of terminator for data output.

5. Trigger commands (Table 2-15)
   They trigger an instrument function upon completion of which a result is written into the output buffer and can be output after a talk addressing.
   Example: triggering a measurement.

6. Special commands (Table 2-16)
   They are required for testing or repair of the instrument (see section 5).

7. Keywords (Table 2-17)
   They can be used to extend or modify the command set of the URV5 without having to make any changes on the instrument itself.

General instructions for IEC-bus programming:

Syntax:

* Minimum of 2 characters plus separator or delimiter

e.g.: C1, U3 /CR/NL/ etc.

* [ ] Characters within brackets may be omitted

e.g.: U6 [[W][X]]

U6
U6X
U6W
U6WX

* <NUMBER> 1 or 2 figures up to a specified maximum value

e.g.: RG[<NUMBER>] RG1 or RGØ1

* <DATUM> Any decimal number including sign and two-digit exponent

  e.g.: DV<DATUM> DV-3.0731E-Ø3

* Delimiters are /EXT//NL//CR/ and combinations (+EOI line)

  (Input pointers will be reset)

  → Table 2-18

* Separator is the comma (,)

* Spaces may be inserted into the command sequence as desired.

* Upper case or lower case letters may be used.

* Maximum number of characters per command = 30 characters

Example for a command sequence (PUC Controller):

IECOUT 7, "command 1, command 2, command 3"/CR//NL/

Such a command sequence may have any length, the length of the individual command being however limited to 3Ø characters only (for input data).

Note: Such a command sequence is read in up to a separator or delimiter, the command being then executed or set (in particular with "X2"). Commands requiring a longer time for execution (e.g. "01" or "X2" at slow measurement speeds) should therefore be at the end of a command sequence, since otherwise the IEC bus will be blocked for the time of the command execution. Any number of separators and delimiters will however be accepted without the bus being blocked.

Example (for PUC):

WRONG:

IECOUT 7, "PA, FØ, X2, IB, U3, FØ, KA1" /CR//NL/

Setting channel B

Execution of command X2 and blocking of bus by subsequent commands

BETTER:

```
IECOUT 7, "PA, FØ, IB, U3, FØ, KA1, IA, X2" /CR//NL/
              └──────────┬──────────┘  └──┬──┘
              Setting of channel B         *
```

* **Note:**
Since in the string the pointer IB has been used for subsequent commands, the effect of IB must be reset by the pointer IA so that the measured value of channel A will also be stored as reference value of channel A.

CORRECT:

```
IECOUT 7, "IB, U3, FØ, KA1, PA, FØ, X2" /CR//NL/
           └──────┬──────┘  └────┬────┘
             Setting of      Setting of
             channel B       channel A
         (second channel)    (main measurement
                             channel)
```

2.4.3.1 Tables for IEC-bus Programming of URV5 in Measurement Mode

Table 2-11 Input pointer

Command code	Function
IA IB	Input for channel A valid Input for channel B valid Note: With commands marked by * it is possible to define the **input channel** - independent of the selected **measurement channel** - for all subsequent commands by sending IA or IB once in the command string (resetting by delimiter or PA, PB).

Table 2-12 Setting commands

Command code	IA, IB	Function
CØ	-	Reading in of test data into basic unit (switch over to UØ or U7)
C1	-	(≙ DCL, SDC after addressing) Basic setting: PA (PB), EØ, F2, KAØ, KFØ, RGØ, UØ__(U7__), HØ, NØ, QØ, W3, Y1 Note: Resetting of input pointers IA, IB
EØ E1	* *	Off On PEAK(PEP) measurement
FØ F1 F2 F3 F4 F5	* * * * * *	(AC) 16 s 4 s 1 s SLOW 260 ms 80 ms FAST 35 ms SUPERFAST 4 1/2-digit display 3 1/2-digit display measurement speed The values given are merely guidelines and vary from probe to probe.

Command code	IA, IB	Function
Syntax: KF<NUMBER>		
KFØ KF1	* *	FRQ CORR off FRQ CORR on
Syntax: KA<NUMBER>		corrective evaluation
KAØ KA1	* *	ATT CORR off ATT CORR on
		(It is also possible to send KFØ1 instead of e.g. KF1)
NØ N1	- -	Output with Output without alpha header
OØ O1	* *	Disabling Triggering, Enabling Zero-correction
PA PB	- -	Probe A Probe B Setting of measurement channel
		Note: Resetting of input pointers IA, IB
Syntax: RG[<NUMBER>]		
RG, RGØ RG1 RG2 RG3 RG4	* * * * *	Autorange 10 mV 100 mV 1 V 100 mV 1 V 10 V 1 V 10 V 100 V 10 V 100 V 400 V RF probe 100-V insertion units DC probe 10-V insertion unit
		(It is also possible to send RGØ3 instead of e.g. RG3)

Command code	IA, IB	Function
UØ U1 U2 U7	* * * *	V dBm dBV W Output unit (ABSOLUTE)
U3 [[W][X]] U4 [[W][X]] U5 [[W][X]] U6 [[W][X]]	* * * *	Δlin Δ% ΔdB X/Ref in V referred to internal reference value Output unit (relative) Note: The letters X and/or W can be added to the commands U3 to U6. X ≙ ΔEXT (reference = second second channel) W ≙ relative readout in W e.g. U3X or U6WX (V is also permissible instead of W, e.g. U4 ≙ U4V)
YØ Y1 YX	- - -	off on Triggering Cyclical temperature measurement
Y?	-	Read-out of set status, i.e. if cyclical temperature measurement is switched on or off (output via SRQ).

Table 2-13 Data input commands

Command code	IA, IB	Function
DU <DATUM>	*	Reference value in V
DV <DATUM>	*	-"- in V
DB <DATUM>	*	-"- in dBV
DM <DATUM>	*	-"- in dBm
DW <DATUM>	*	-"- in W
DR <DATUM>	*	Reference impedance in Ω
DZ <DATUM>	*	-"- in Ω
DA <DATUM>	*	Correction attenuation in dB
DF <DATUM>	*	Correction frequency in Hz
Syntax: D = [AA / BB]		
D =	*	Data copying to channel IA, IB
D = AA	-	-"- values B same as in channel A
D = BB	-	-"- values A same as in channel B

Table 2-14 Interface commands

Command code	IA, IB	Function
WØ	-	NL
W1	-	CR
W2	-	ETX
W3	-	CR + NL
W4	-	EOI
W5	-	NL + EOI
W6	-	CR + EOI
W7	-	ETX + EOI
W8	-	CR + NL + EOI
QØ	-	off
Q1	-	on (all SRQ)
Q2	-	on (except for SRQ (80) ≙ meas.value ready, all SRQ)
Q3	-	on (only error SRQ, >=96)
HØ	-	off
H1	-	on

Delimiters for string output

Call of SRQ

Auxiliary mode (PET time-out correction)

Table 2-15 Trigger commands

Command code	IA, IB	Function
XØ	-	Reset command for commands X3/X4
X1	-	Trigger command (≙ GET)
X2	*	Trigger command + storage of measured value as reference value
X3	-	Setting command for triggering measurement upon a service request
X4	-	Setting command for continuous triggering
X8	-	Trigger command for both measurement channels (measured values are separated by delimiters (corresponding to WØ to W8)
ZØ	*	Output of reference value
Z1	*	Output of reference impedance
Z2	*	Output of correction frequency
Z3	*	Output of correction attenuation

Table 2-16 Special commands

Command code	IA, IB	Function
SØ	-	LED test of display
S4	-	Indication of date under which the calibration values have been stored.
S5	-	Output of error code according to hardware function errors occurred.
S6	-	Checksum output of program memory.
ST	*	Status output of all device settings for the selected channel.
SP	*	Output of probe identification for the addressed channel

Table 2-17 Keywords

Command code	Function
CALIBRATION	Switchover between measurement and calibration mode: only commands for calibration are valid (CA..)

Table 2-18 Separators and delimiters

Symbol	Designation	ASCII decimal equivalent	Recommended use
,	Comma	44	Separator between commands
CR	Carriage Return	13	
NL	New Line	10	Delimiters
ETX		3	
EOI	If the EOI line is set during the transfer of the last character, this is also accepted as delimiter.		

2.4.3.2 Additional Explanations and Notes on IEC-bus Commands for URV5

Input pointers (Table 2-11)

IA, IB

The URV5 is a dual-channel measuring instrument, one channel being used as main measurement channel. All setting commands therefore refer to the selected main measurement channel.

With the aid of the pointer IA, IB it is possible to set also the second channel without effecting switchover from the measurement channel. IA is used for channel A, IB for channel B. IA, IB may however also be used for identification of the subsequent commands. This is to ensure correct setting of the instrument independent of the measurement channel also in the case of program jumps, interrupt routines, etc.

> The effect of this pointer ends upon the reception of a delimiter (Table 2-18) or by switchover of the measurement channel with PA, PB.

Commands which are addressed by IA, IB, are marked by an * in the Tables.

Setting commands (Table 2-12)

CØ

With the aid of command CØ the data of the inserted probes can be read into the basic unit (e.g. after insertion of a probe into the URV5 und SRQ (114)).

The display unit is reset to V (or W in the case of a power head)!

C1

causes a basic setting of the URV5 (section 2.3.11 Basic Setting) and corresponds to the command sequence

PA(PB),EØ,F2,KAØ,KFØ,RGØ,OØ,UØ__(U7__),HØ,NØ,QØ,W3, Y1

PB, if a probe is inserted only in channel B.

U7, if power head for NRV is inserted in the channel.

The pointers IA, IB are reset by C1, i.e. the subsequent commands concern the selected measurement channel.

Example:

IB, C1, DV3.Ø, DF1E+6, U3

Input data for channel A if a probe is inserted. Channel A is set by C1.

C1, IB, DV3.Ø, DF1E+6, U3

Input data for channel B as defined by IB.

If there is a hardware fault (E xxx indicated on the display), this can be erased by "C1" until a new hardware fault is detected (section 2.3.12).

EØ, E1 Switching off or on PEAK (PEP) measurement. Only possible with AC probes. With DC, E1 is not evaluated and SRQ(97) is sent if the interface has been set accordingly.

FØ...F5 The commands FØ to F5 are used to set the measurement speed and the resolution of the URV5 (section 2.3.8 Measurement Speed).

> **Note:** A different measurement speed can be adjusted for the two channels.
>
> In the case of dual-channel measurements (ΔEXT: U3X - U6X or trigger X8) the measurement is carried out at the respective measurement speed selected after reception of the trigger command. The reaction time of the instrument (i.e. the time until the measured value is ready) can basically be determined by adding the individual measurement times . (Rule of thumb for different measurement speeds.)
> Since the measurement cycles partly overlap, the actual reaction time is considerably lower depending on the type of measuring head used and especially if the measurement speeds are the same for both channels.
> For carrying out the measurement under optimum time conditions, it is recommended to use SRQ (SRQ(80)) in the case of long measurement times.

KFØ, KF1 With the aid of these commands the frequency response correction (KFØ, KF1) and

KAØ, KA1 the attenuation correction (KAØ, KA1) can be switched off and on. For this purpose it is necessary to enter the test frequency by means of the command DF<DATUM> or the attenuation value by the command DA<DATUM>.

KFØ, KF1 is not evaluated in case of DC and SRQ (97) is sent provided that Q1 to Q3 has been set.

(See also sections 2.3.5.3 ATT CORR and 2.3.5.4 FRQ CORR.)

NØ, N1

With the setting NØ, an alphaheader consisting of eight characters is output ahead of the numerical string (section 2.4.4 Data Output). It can be suppressed by means of N1.

OØ, O1

The command O1 can be used to carry out a zero adjustment in the selected channel (defined by PA, PB, IA, IB).

Triggering and enabling the ZERO function: "O1"
Disabling the ZERO function: "OØ"

Note: The command O1 should always be at the end of a command sequence since on the one hand the commands (see section 2.4.3 Example for PUC) are immediately evaluated after reception of the separator or delimiter and on the other hand the zero adjustment takes about 4 s so that the bus will be blocked for this period if further commands are sent to the instrument.

After completion of the zero adjustment without error, the URV5 (Q1 to Q2) sends SRQ (90), in case of an error SRQ (115). The commands OØ and O1 are illegal for a DC probe (SRQ (97)).

PA, PB

With the aid of commands PA, PB the main measurement channel is selected, from which display and measured value (after a trigger command is sent) will be derived.

PA, PB cancels the effect of IA, IB.

If there is no probe in the selected main measurement channel, the URV5 (Q1 to Q3) will send SRQ (104).

RG,
RGØ to RG4

The measurement range permissible according to the probe inserted is adjusted with the aid of these commands.

UØ...U7

The commands UØ to U7 are used to determine the output unit for output of the measured value via display or bus (section 2.4.4.2).

An X for dual-channel measurement (ΔEXT) and/or a W for readouts referred to the basic unit watt can be added in any sequence to the commands U3 to U6.

V for basic unit volt is also permissible.

If there is no probe in the selected measurement channel, the URV5 (Q1 to Q3) will send SRQ (104).

YØ, Y1
YX, Y?

After a certain period the URV5 automatically carries out a temperature measurement (additionally: AUTO ZERO measurement for input amplifiers) which interrupts the normal measurement cycle. This may have a disturbing effect for certain measurements.

This cyclical temperature measurement can be switched off by command YØ, switched on again by Y1 and an AUTO ZERO/temperature measurement can be triggered by YX.

Note: The user should be aware of the fact that after sending of the command YØ an additional measurement error may occur with an increasing period of time.

Therefore, this command YØ

1. should only be used after warm-up of the instrument (approx. 2 hours) and

2. be cancelled again by command Y1 as soon as permitted by the particular measurement.

The command Y? can be used to read out the selected status (YØ, Y1). If the interface has been set accordingly (Q1, Q2), the URV5 will send a service request after it has received the command Y?, and after decoding of the status byte this status can be read out (see section 2.4.6.5 Service Request).

Data input commands (Table 2-13)

Dx<DATUM>

The datum may be entered with or without exponent. The exponent consists of a maximum of 2 figures and a sign, whereas the mantissa may have any length (assuming a maximum command length of 30 characters). Only so many characters of the mantissa will however be considered as can be manually entered into the display (see section 2.3.9.1 Input of Reference Value, etc.). A positive sign and a zero ahead of the decimal point are optional. Spaces have no influence on the input. (DV may be used instead of DU and DZ instead of DR).

Example: Input of a reference value of 0.316 V. All commands stated are equivalent.

DUO.316, DU.316, DU+0.316, DU 0.316, DU316E-3

D= [AA / BB]

Copying of entire data memory.
The URV5 has separate memories for the two channels. In cases where the same data are required for channel A and channel B, these data need only be entered once into the instrument and can then be transferred into the other memory by means of the commands D = AA, D = BB.

D = AA: all data from channel A to channel B
D = BB: all data from channel B to channel A

D = AA, D = BB are independent of the pointer.

When the command D = is sent, all data of the channel that has been defined by PA, PB or IA, IB will be copied into the memories of the other channel.

Example:

```
IA, DA<DATUM>, DU<DATUM>,              D=    (≙ D=AA)
IA, ... , PB, DZ<DATUM>, DW<DATUM>, D=    (≙ D=BB)
```

Interface commands (Table 2-14)

WØ...W8 — The commands WØ to W8 are used to set the delimiter for the data output.

QØ...Q3 — With the aid of the commands Q2 and Q3 the URV5 can be set so that only part of all available SRQ events will cause output of an SRQ (e.g. Q3 only error SRQs).

The division into Q1, Q2, Q3 commands and the coding of the status byte in case of a service request is described in section 2.4.6.5.

HØ, H1 — Auxiliary mode

With the aid of command H1 the URV5 can be set so that after a TALK addressing it always starts to transfer the first character of the output string.

This mode can be switched off by HØ.

This command is for instance necessary when using older CBM computers (design state 1982), since these cause an asynchronous abortion of the INPUT command after a period of 64 ms and, hence, errors may occur in the data output from the URV5 to the controller. If the URV5 starts to transfer the first character while the computer aborts the INPUT command, the URV5 will continue with the second character when there is the next TALK addressing, so that the first character is missing in the string read in by the computer.

The command H1 should however only be used with the computers referred to above, so that for other controllers the possibility of partial string transfer is preserved.

When using CBM computers (design state 1982), care should be taken that the delimiter CR (carriage return) has been set for the URV5 (command W1).

Trigger commands (Table 2-15)

X1 Just as the universal command GET (see section 2.4.6.4 Device Trigger) the command X1 causes the URV5 to start a measurement with the selected settings and to store the result in the output buffer. If the interface has been set accordingly, a service request will be output after completion of the measurement.

X2 The command X2 has the same effect as X1 and GET, only that the measured value is additionally stored as reference value.

One special point of this command should however be mentioned:

The control character X2 should always be used as last command before the delimiter, since after reception of X2 the URV5 is blocked for any further commands. This means that if further setting commands are sent to the URV5 after X2, the IEC bus will be blocked until X2 has been executed (e.g. 16 s with a measurement speed FØ). X2 may be followed by any number of delimiters.

If a relative function (ΔINT) had previously been selected by means of U3 to U6, the next output value will already be output relative to this value, i.e. the result is either Ø or 1.

When the input parameters IA, IB are used, the result of this measurement can also be stored as reference value of the second channel.

Example:

Measurement in second channel and switchover to measurement in main channel relative to this reference value (ΔINT).

IECOUT 9, "PB, IA, X2" . Take care of . measuring time! .	Measurement in channel B, with the aid of input pointer IA measured value is stored as reference value for channel A.
IECOUT 9, "PA, U5, X1"	Measurement in channel A, ΔdB calculation.

X3 — The command X3 has the advantage that a special trigger command (X1, X2, GET) may be omitted so that the measurement speed will be increased.

X4 — Command X4 is a setting command like X3 and triggers free-running measurements, i.e. the URV5 itself starts a measurement and the next one immediately upon completion of the previous measurement. This makes for maximum measurement speed.

XØ — The settings X3 and X4 can be reset by means of the control character XØ.

X8 — Command X8 can trigger a measurement for **both** channels. The measured value will be evaluated according to the respective channel settings (see note on page 2.60 under FØ...F5).

The two measured values are separated by delimiters (set by WØ to W8) and can thus be received by the controller by reading them twice.

> If a measurement is triggered without the necessary probe(s) being inserted, SRQ(104) will be sent if the interface has been set accordingly (Q1 to Q3).

ZØ to Z3 — With the aid of the commands ZØ to Z3 the internally stored input values (reference value, reference impedance, correction frequency and correction attenuation) are written into the output buffer.

The output buffer can be read out by a TALK addressing, but this can be done only once (except with X8). No further command may be sent between the trigger command and the TALK addressing since otherwise the output buffer will be erased. The data format for the output is described in section 2.4.4.2.

Special commands (Table 2-16)

SØ — LED test for approx. 3 s.

S4 — Display of calibration date of basic unit for approx. 3 s.

S5 — Error code output,
can be read into the controller after a TALK addressing.

S6 — Checksum output of the program memory,
can also be read into the controller after a TALK addressing.

Format: CHKSUMS_XXXXH_PX.Y

ST — Status output of all current device settings, can be read into the controller after a TALK addressing.

Format: PA,EØ,F2,KAØ,KFØ,OØ,RGØ,UØ__,HØ,NØ,QØ,W3,Y1
|
the selected main measurement channel is identified by PA, PB or the second channel by IB, IA. If Q1 to Q2 has been set, SRQ (85) will be sent.

SP — Using the special command SP, the status of the probes can be read out (assignment with IA, IB).

No probe in the channel:
Format: PA,____ NO _ PROBE

Test adapter or faulty probe
Format: IB, TEST-ADAPTER

Correctly calibrated probe:
Format: PB, designation, serial No., cal. date
12 byte 10 byte 8 byte

e.g.
PB, URV5-Z1 _____, 102587/001, 08.07.87

This enables the controller to identify the probe automatically!

Note: The commands SØ to ST clear the set trigger mode as well as a valid value in the output buffer.

Keyword (Table 2-17)

The command set of the URV5 is switched over to calibration mode by means of the keyword CALIBRATION. The URV5 only accepts commands whose first two letters are CA. Other commands will not be accepted and cause a service request (SRQ (97)) if the interface has been set accordingly.

The keyword SERVICE enables additional commands which are only used for testing or checking of the URV5. The command set in the measurement mode is thus extended.

2.4.4 Data Output

The URV5 is able to output a measured value, the reference values, error code, single-line or multiple-line text strings.

After addressing by the controller, the output format is identical in the talk-only mode and in the talk mode.

2.4.4.1 Text String Output

After being addressed as talker, the URV5 is ready at any time to answer the controller. Under certain conditions the URV5 will therefore output a text string instead of data.

The string "URV5 IN LOCALMODE" is output in local mode after talker addressing.

The string "URV5 NOT TRIGGERED" is output in remote mode after talker addressing without previous triggering. If the interface has been set accordingly (Q1 to Q3), the output of SRQ (byte 99) is linked.

The string "URV5 NOT READY" is output if the instrument is not ready to produce a measured value. (With Q1 to Q3, output of SRQ [byte 101].)

The string "URV5 PA NO PROBE" or "URV5 PB NO PROBE" is output if no probe is contained in the selected measurement channel (A or B) and the attempt is made to trigger a measurement by means of a trigger command (X1 to X4, X8). (With Q1 to Q3, output of SRQ [byte 104].)

2.4.4.2 Data Output in Measurement Mode

The measured value, reference value or error code can be output either as numerical value only (control character N1) or as numerical value plus preceding 8-digit alphaheader (control character NØ). The structure of the alphaheader is shown in Fig. 2-13. Three characters are provided for the device function (Table 2-19), three for the unit (Table 2-20), one for special identification such as overflow (0), overranging or underranging in case of range hold (H, L) etc. and one character for allocating the numerical value to a measurement channel (A for channel A, B for channel B).

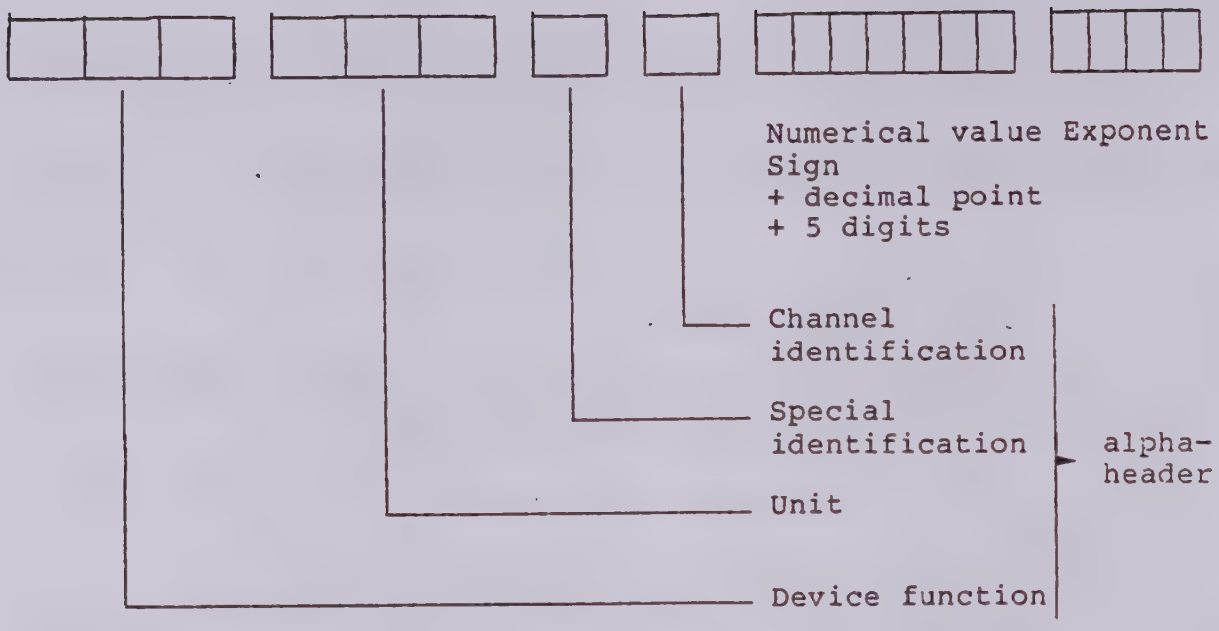

Fig. 2-13 Format of data output

The numerical value is always output with exponent.

Example:

- Output of a valid measured value
  1.0032 V (DC) (channel A)

  DC_V___A_1.ØØ32E+ØØ

- Output of a valid measured value
  $1.0200 \cdot 10^{-3}$ W (AC, channel B referred to second channel A, Δlin)

  AC_WDLXB_1.Ø2ØØE-Ø3

- Output of a reference attenuation
  20 dB for channel A

  ATTDB__A_2Ø.ØØE+ØØ

The data output is terminated by the set delimiter (Table 2-18).

Table 2-19 Coding of device function for data output

Code	Function
AC_	AC measurement
DC_	DC measurement
REF	Reference value
ATT	Reference attenuation
FRQ	Reference frequency
Z__	Impedance

_: Space

Table 2-20 Coding of output unit

Code	Function
V__	V
DBV	dBV
DBM	dBm
W__	W
VDL	Δlin (V or W)
WDL	Δlin (V or W)
VD%	Δ% (V or W)
WD%	Δ% (V or W)
VDB	ΔdB (V or W)
WDB	ΔdB (V or W)
VRL	X/REF (V or W)
WRL	X/REF (V or W)
DB_	dB for ATT (attenuation value)
MHZ	MHz for FRQ (reference frequency)
OHM	Ω for Z__ (impedance)

_: Space

Table 2-21 Special identification

Code	Meaning
-	Valid measured value
X	Setting ΔEXT
H	Overranging
L	Underranging
O	Display overflow

_: Space

In the case of a hardware error the output string is adapted to the general structure of the alphaheader.

E R R C O D E _ X X X X H

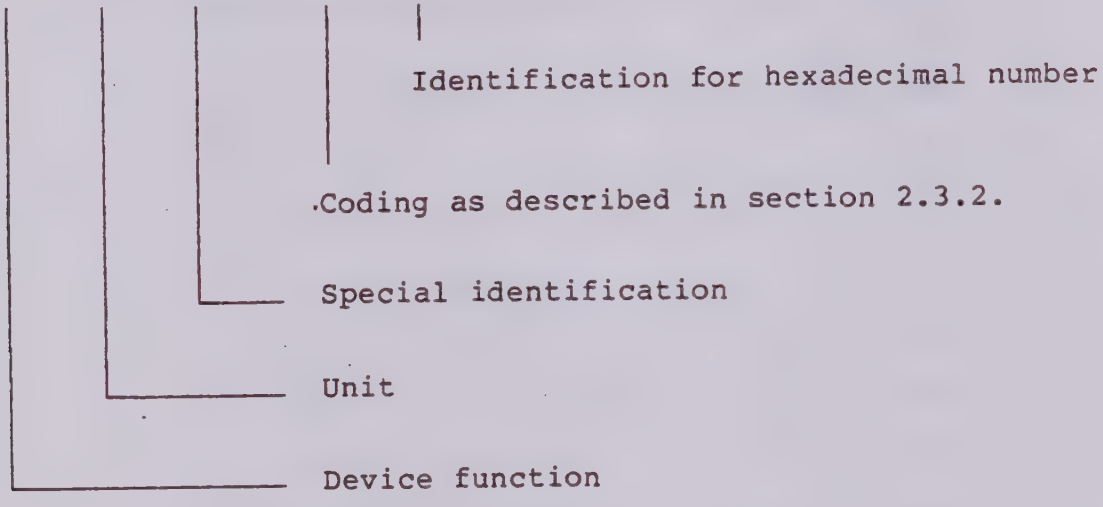

Example: ERRCODE_ØØ1ØH

2.4.5 Error during IEC-bus Operation

(For error messages see section 2.3.12).

If a hardware error occurs during IEC-bus operation, this will be read out on the display as described in section 2.3.12. After talker addressing the error code can be directly read into the controller. This is also possible after the command "S5" (measurement mode only) has been sent to the URV5.

The command "C1" erases the error until a new hardware error is detected.

In the calibration mode the error can be erased by sending the command "CAC1".

2.4.6.1 Table of Universal Commands

	Command	PPC/PUC	hp 9835/45	hp 9825	Tekt. 4051/52
addressed	Selected Device Clear	IECLAD9 IECSDC IECUNL	RESET 709	clr 709	WBYTE@41,4,63:
	Group Execute Trigger	IECLAD9 IECGXT IECUNL	TRIGGER 709	trg 709	WBYTE@41,8,63:
	Go to Local	IECLAD9 IECGTL IECUNL	LOCAL 709 or LOCAL 7 *	lcl 709 lcl 7*	WBYTE@41,1,63:
	Parallel Poll Configure	IECLAD9 IECPPC IECPPE S P IECUNL	PPOLL CONFIGURE 709; mask	polc 709, mask	---
	Parallel Poll Unconfigure (addressed)	IECLAD9 IECPPC IECPPD IECUNL	PPOLL UNCONFIGURE 709	plu 709	---
	Serial Poll	IECSPL9,s%	STATUS 709; s	rds(709)A	POLL A,S;9
not addressed	Device Clear	IECDCL	RESET 7	clr 7	WBYTE@20:
	Local Lockout	IECLLO	LOCAL LOCKOUT 7	llo 7	WBYTE@17:
	Parallel Poll Unconfigure (universal)	IECPPU	PPOLL UNCONFIGURE 7	plu 7	---
	Parallel Poll	IECPPL V%	PPOLL (7)	pol(7)A	---

* LOCAL 7 switches off the REMOTE line. Prior to the output of new IEC-bus commands, the REMOTE line must be reactivated by REMOTE 7.

2.4.6.2 Remote/Local

When the URV5 receives its listen address from the controller, it changes to the remote mode and remains in this mode also after completion of a data transfer. The front-panel controls are disabled in the remote mode, only all indicators and the LEDs in the keys remain operative. The remote mode is indicated by the LED REM and, if applicable, by

SRQ (URV5 sends service request)
LLO (URV5 is in local lockout mode)
READY (valid value in output buffer)

The status of the interface can thus be checked. If the URV5 receives the addressed command GTL (go to local) or if the LOCAL key is pressed, it returns to the local mode, i.e. settings can be made manually and the LED REM goes out.

If the LOCAL key is not inhibited (see below), it has always priority over the IEC bus. This means that a transfer on the bus can be interrupted by this key. If the URV5 was in TALK mode and the LOCAL key is pressed before the delimiter has been transferred, this may even cause blocking of the IEC bus.

The LOCAL key can be inhibited by the controller with the aid of the LLO command (local lockout). This is indicated by the LED LLO lighting up on display 5.

If the mode changes from remote to local to remote, the settings

Q0 to Q3
N0, N1
W0 to W8

are preserved.

2.4.6.3 Device Clear

If the controller sends the universal command DCL (device clear) or the addressed command SDC (selected device clear), the URV5 returns to its basic setting (see section 2.3.11 Basic Setting). Basic setting is also restored when the URV5 is switched on or when it receives the IEC-bus command "C1".

2.4.6.4 Device Trigger

When the URV5 receives the addressed command GET (group execute trigger), it immediately triggers a measurement with the selected setting. This trigger command corresponds to the device-specific trigger command "X1", but requires much less time for execution than X1.

2.4.6.5 Service Request

By setting the line SRQ (service request) the URV5 is able to request service from the controller. This is however only useful if the controller is to be informed of the completion of a measurement or autocalibration or of an error. The interface can be set accordingly by means of the command QØ to Q3 (Table 2-14).

An * in Table 2-22 means that with setting Q1 to Q3 an SRQ will be made, "-" means that no SRQ will be made in this case.

If after reception of a service request the controller carries out a serial poll, it can determine the device status which has caused the service request be decoding the status byte (Fig. 2-14 and Table 2-22).

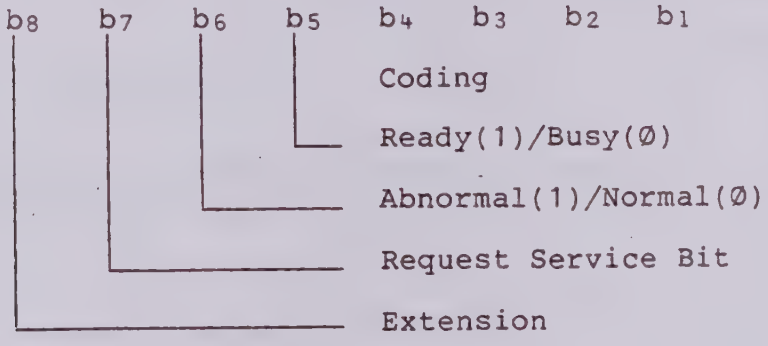

Fig. 2-14 Status byte

Table 2-22 Coding of status byte

Device status	Status byte	Decimal equivalent	Q1	Q2	Q3
Measured value ready	0 1 0 1 0 0 0 0	80	*	-	-
Line (of multiple-line text) ready	0 1 0 1 0 1 0 1	85	*	*	-
Calibr. value ready	0 1 0 1 0 1 1 0	86	*	*	-
Auto offset on	0 1 0 1 0 1 1 1	87	*	*	-
Auto offset off	0 1 0 1 1 0 0 0	88	*	*	-
Zero measurement ready	0 1 0 1 1 0 1 0	90	*	*	-
Syntax error	0 1 1 0 0 0 0 0	96	*	*	*
Command illegal	0 1 1 0 0 0 0 1	97	*	*	*
Input data incorrect	0 1 1 0 0 0 1 0	98	*	*	*
Controller input without trigger	0 1 1 0 0 0 1 1	99	*	*	*
Hardware error	0 1 1 0 0 1 0 0	100	*	*	*
URV5 not ready for output	0 1 1 0 0 1 0 1	101	*	*	*
Overranging during range hold	0 1 1 0 0 1 1 0	102	*	*	*
No probe in measurement channel	0 1 1 0 1 0 0 0	104	*	*	*
Calibration faulty	0 1 1 1 0 0 0 1	113	*	*	*
Change of probe (insertion of a probe)	0 1 1 1 0 0 1 0	114	*	*	*
Zero adjustment incorrect	0 1 1 1 0 0 1 1	115	*	*	*

2.4.6.6 Parallel Poll (PPOLL)

The URV5 can be configured by the IEC-bus controller for an answer to a parallel poll by means of the primary command PPC followed by the secondary command PPE. The PPE command has the form "X11ØSPPP". The three least-significant bits PPP designate the binary coded number of the data line on which the answer is to be made.

The parallel poll output of the URV5 is linked with the SRQ, i.e. via the configured bit (data line) the controller can recognize from a parallel poll sequence whether the URV5 has made a service request or not.

Example: PPE = Ø11Ø1Ø1Ø allocates the bus data line DIO3.
S = 1 causes the PPOLL answer 1.

Example for the Controller PUC from Rohde & Schwarz:

Configuration: S = 1
Data line 5 for PPOLL in case of SRQ

(Note: Contrary to the definition of the PPE command, the data lines are designated by the figures 1 to 8 in this case.)

```
 10  IECSRQ GOTO 1000
     .
     .
100  IECLAD9: IECPPC: IECPPE15: IECUNL      ┐  Configuration
110  IECOUT9, "Q1"                          ├► PPOLL and
     .                                      │  SRQ enabled
     .                                      ┘  for URV5
     .
200  IECLAD9: IECGXT: IECUNL                   Trigger command
     .                                      ┐
     .                                      │  Upon completion
     .                                      ├► of measurement
     .                                      │  the URV5 sends
     .                                      │  SRQ(80); eva-
999  GOTO 200                               ┘  luation program

1000 IECPPL P%: PRINT P%                       PPOLL sequence
     .                                         P% = 16
     .
1050 IECSPL9, S%: PRINT S%                     SRQ poll
     .                                         S% = 80
     .
1100 IECIN9, MW$: PRINT MW$                    Read-in of
1200 IECRETSRQ                                 measured value
```

2.4.7 Output of Measured Value in Talk-Only Mode

For logging the measured values without the aid of an IEC-bus controller, data can be output via the IEC-bus connector to a listen-only device with IEC-625 interface. This unit, for instance a printer, must be set to LISTEN ONLY mode and the URV5 to TALK ONLY mode (see section 2.4.2 Setting of Device Address/TALK ONLY).

In this mode the URV5 is operated from the front panel and any value indicated on the display can be output to the listen-only device by pressing key 6 LOCAL/TALK. The coding is described in section 2.4.4 Data Output. The delimiter is fixed, i.e. each output is terminated by CR (carriage return) and NL (new line).

2.5 Analog Output

With the aid of the analog output option a DC voltage proportional to the indicated value can be output. This voltage is produced by a 12-bit D/A converter in step with the rate of the display, i.e. if the URV5 is operated via the IEC bus, the voltage value can only be renewed by triggering of a measurement. The operating range of the output voltage is -2 to +2 V with a resolution of 1 mV (Z_{out} = 1 kΩ). The output is referred to safety ground (chassis ground).

The following relationship applies:

$$\frac{\text{Output voltage}}{\text{mV}} = \frac{\text{Numerical value *)}}{10}$$

*) without decimal point and exponent

Example:

Readout	Output voltage
11.500 V	+ 1.150 V
-37.25 dBV	- 0.372 V
1.13 %	+ 0.011 V

Due to the great number of conversion modes of the URV5 there is a corresponding number of possibilities of controlling the output voltage of the analog output:

linear output, absolute (V, W)
linear output, relative (ΔV, ΔW, Δ%, X/Ref, channel A/B)
logarithmic output (dBV, dBm, ΔdB, channel A/B)

It should be noted that there may be jumps in the output voltage if the number of digits of the displayed value is changed by switchover of the measurement range or display format. A measurement range switchover can be avoided by means of the RANGE keys in case of underranging. In case of major changes of the test voltage, the readout should however be switched to dBV, dBm or ΔdB. With logarithmic indication the resolution is always 0.01 dB and the output voltage changes by 1 mV for a variation of 0.1 dB of the measured value and by 10 mV for a variation of 1 dB.

With a display range of -199.99 to +199.99 (dBV, dBm, ΔdB) the entire measurement range of the URV5 can be covered.

2.6 IEC-bus Commands in Calibration Mode

These commands become effective upon entry of the keyword CALIBRATION in the measurement mode. The commands listed below are then only admissible.

1. Input pointers

Command code	Function
CAIA CAIB	Input for channel A Input for channel B **Note:** With the aid of these input pointers especially the commands CAFØ to CAF5, CARG<NUMBER> and CA01 can be controlled independently of the selected measurement channel. *

2. Setting commands

Command code	Function
CA2H CA2L	Driving of DC output (+2,047 V) Driving of DC output (-2,048 V) **Note:** CAE1 need not be sent for switchover between these two commands. (This function is used for adjustment of the DC output option.)
CA1 CA5 CA6	Calibration function (for temperature sensor) Calibration function (for AC measurement) Calibration function (for DC measurement) **Note:** These functions are used for calibration of the basic unit.

Command code	Function
CAHC<NUMBER>	Auxiliary calibration function (for calibration of probe) <NUMBER>: Ø = DC 1 = AC+ 2 = AC- 3 = AC+/- 4 = temp. sensor → Measurement without load impedance 11 = AC+ 12 = AC- 13 = AC+/- → Measurement with load impedance **Note:** This is an auxiliary command for calibration of the probe which cannot be carried out by the user. With the aid of the CAL command only equivalent measured values can be produced, which can be read in by the controller.
CACØ CAC1	Reading probe data into URV5 Calibration clear **Note:** When this command is sent 1. a selected measurement range will be reset, 2. the URV5 will return to the selected calibration function if a measured value is read out (after sending CAX1), 3. an error will be erased.
CAE1	Calibration end **Note:** This command is used for terminating a calibration routine. It must be sent to the URV5 if the calibration function is changed. Example: CA1,....., CAE1, CA4
CAPA CAPB	Calibration/measurement channel A Calibration/measurement channel B

Command code	Function
CAFØ to CAF5	Filter setting, as in measurement mode * can be controlled by CAIA, CAIB.
CANØ CAN1	Output of value with alphaheader Output of value without alphaheader
CAOØ CAO1	Disabling Triggering/Enabling Zero adjustment **Note:** A zero adjustment can only be made with a properly calibrated AC probe. * can be controlled by CAIA, CAIB.

3. Data input commands

Command code	Function
CADD<DATE>	Input of calibration date **Note:** The calibration date must be entered at the latest when "dAt?" is displayed. It can be changed subsequently at any time. The calibration date must consist of at least two figures, the maximum being four figures. The input of a decimal point is irrelevant. The first two figures are always combined (e.g. as month) and the last two (e.g. as year).
CARB<DATA>	Calibration range for basic calibration **Note:** The measurement range to be calibrated is not selected like in the measurement mode by input of a range number, but by entering the nominal calibration value. The URV5 then automatically selects the correct measurement range for calibration.

Command code	Function
CARG<NUMBER>	Measurement/calibration range **Note:** This command is used to set the calibration range for probe calibration, otherwise it only fixes the measurement range. * can be controlled by CAIA, CAIB.

4. Interface command

Command code	Function
CAQØ to CAQ3	SRQ off/on like in measurement mode.

5.Trigger commands

Command code	Function
CAL	Trigger command for a calibration measurement with subsequent storage of the calibration value (basic calibration of instrument) or trigger command for a probe calibration measurement (in this case the calibration value can be read by the controller). -
CAX1	Trigger command for releasing a measured value for checking during calibration of the URV5.

6. Special commands: not applicable

7. Keyword

Command code	Function
CALEND	Keyword for switching from calibration to measurement mode. The commands for calibration become invalid.

8. Delimiters and separators: same as in measurement mode.

Universal commands in calibration mode

GET	is inhibited and not executed.
DCL SDC	Upon this command the URV5 returns from the calibration mode to the basic setting.
GTL	Upon this command the URV5 also leaves the calibration mode and changes to the measurement mode with local control.
LLO/SPE/SPD PPL	may be used without restriction, the instrument remaining in calibration mode.

Talk-only mode for calibration

In the calibration mode the key 6 LOCAL/TALK can also be used for data output.

After digital entry, key 6 will be evaluated as store key when it is actuated. A measured value for the purpose of checking can also be output to the listen-only device.

Table 2-23 ISO 7-bit code (ASCII code)

(SENT AND RECEIVED WITH ATN=1)

Bits ② b_7 b_6 b_5 →					000	MSG ①	001	MSG	010	MSG	011	MSG	100	MSG	101	MSG	110	MSG	111	MSG
b_4	b_3	b_2	b_1	COLUMN → / ROW ↓	0		1		2		3		4		5		6		7	
0	0	0	0	0	NUL		DLE		SP	MLA ASSIGNED TO DEVICE	0	MLA ASSIGNED TO DEVICE	@	MTA ASSIGNED TO DEVICE	P	MTA ASSIGNED TO DEVICE	`	MEANING DEFINED BY PCG CODE	p	MEANING DEFINED BY PCG CODE
0	0	0	1	1	SOH	GTL	DC1	LLO	!		1		A		Q		a		q	
0	0	1	0	2	STX		DC2		"		2		B		R		b		r	
0	0	1	1	3	ETX		DC3		#		3		C		S		c		s	
0	1	0	0	4	EOT	SDC	DC4	DCL	$		4		D		T		d		t	
0	1	0	1	5	ENQ	PPC ③	NAK	PPU	%		5		E		U		e		u	
0	1	1	0	6	ACK		SYN		&		6		F		V		f		v	
0	1	1	1	7	BEL		ETB		'		7		G		W		g		w	
1	0	0	0	8	BS	GET	CAN	SPE	(		8		H		X		h		x	
1	0	0	1	9	HT	TCT	EM	SPD	)		9		I		Y		i		y	
1	0	1	0	10	LF		SUB		*		:		J		Z		j		z	
1	0	1	1	11	VT		ESC		+		;		K		[		k		{	
1	1	0	0	12	FF		FS		,		<		L		\		l		¦	
1	1	0	1	13	CR		GS		-		=		M		]		m		}	
1	1	1	0	14	SO		RS		.		>		N		^		n		~	
1	1	1	1	15	SI		US		/		?	UNL	O		_		o		DEL	

ADDRESSED COMMAND GROUP (ACG)

UNIVERSAL COMMAND GROUP (UCG)

④ LISTEN ADDRESS GROUP (LAG)

TALK ADDRESS GROUP (TAG)

PRIMARY COMMAND GROUP (PCG)

SECONDARY COMMAND GROUP (SCG)

NOTES: ① MSG = INTERFACE MESSAGE

② b_1 = DIO1...b_7 = DIO7

③ REQUIRES SECONDARY COMMAND

④ DENSE SUBSET (COLUMN 2 THROUGH 5)

For **checking and calibrating the basic unit** URV5 at regular intervals, it is recommended to use the **Service Kit UZ-8** (394.9968.02) for the URV5/NRV. The service kit permits **check, calibration and troubleshooting** for the analog board as well as the option DC output (URV5-B2) under computer control or via the keyboard. For this purpose, the service kit contains a special adapter for the analog board (instead of a measuring head) as well as two floppy disks with test and calibration software for the R&S controllers of the PCA family and for PPC and PUC. In addition, a DC voltage calibrator and a digital multimeter (UDS5) are required.

Due to a high calibration accuracy, **the calibration of measuring heads** for the URV5 can currently only be performed by the manufacturer.

With the aid of the performance tests described in the following the basic unit URV5 and the associated probes can be checked completely and rapidly by means of a few selected test points. Although in these tests the basic unit can only be checked in conjunction with certain measuring heads (and vice versa), separate sections with separate performance test reports are provided for the individual components, so that the user will have a better overview of the entire test sequence.

Checking of the frequency response of RF probes is intentionally not included. The test carried out (linearity, reflection coefficient) in fact ensure a correct frequency response and the test setup required would be too elaborate for the user. If these measurements are to be carried out, however, there are more detailed instructions in section 3.7.

Prior to the performance tests a warm-up period of at least 2 hours at the measurement temperature (18 to 28° C) should be allowed for the URV5. The ambient temperature should be between 20 and 25° C since in this range the measuring instruments used exhibit the smallest errors. Please take also care that the relative humidity does not exceed 80% and the AC supply voltage does not differ more than ±10% from the set nominal value.

3.1.1 Required Measuring Equipment and Accessories

Ref. No.	Designation	Required specifications	R&S Type	For use, see section
1	DC calibrator	1 V to 400 V ±0.01%		3.1.2.5
2	AC calibrator	200 µV to 10 V ±0.1% 100 kHz (200 kHz)		3.1.2.6
3	DC Probe URV5-Z1			3.1.2.4 3.1.2.5
4	RF Probe URV5-Z7 or 10-V Insertion Unit URV5-Z2			3.1.2.4 3.1.2.6
5	Waveform generator	Sinewave, sinewave burst 3 V_{pp}, 100 kHz		3.1.2.7
6	Controller with IEC-bus interface		PUC	3.1.2.3

3.1.2 Checking the Rated Specifications

3.1.2.1 Self-Testing

The URV5 is able to recognize and display certain malfunctions of the computer and of the analog board by means of an automatic performance test. This self-test is triggered when the instrument is switched on. It is however recommended to carry out this test also when the instrument is in operation. For this purpose the URV5 must be briefly switched off and on again.

If no error message appears on the display, no error has been detected during the self-test. Otherwise the fault can be located according to section 2.3.12.

3.1.2.2 Functional Check of Displays and Keyboard

The displays can be checked with the aid of special function Ø, i.e. after calling up this function all display elements and the keys must light for a few seconds.

Sequence of keys	IEC-bus command (PUC)
SHIFT	IECOUT 9, "SØ"
SPEC	
0	

For checking the keyboard all keys should be pressed in the sequence described in the following and the response of the URV5 be checked on the display. First remove the measuring heads from the instrument and switch the URV5 briefly off and on again.

Sequence of keys		Display		
		-----		V
SHIFT	REF	0.	0	V
1	REF	1.	0	V
2	REF	12.	0	V
3	REF	123.	0	V
4	REF	1234.	0	V
5	REF	12345.	0	V
EXP	REF	12345.	0	V
6	REF	12345.	6	V
CLEAR	REF	0.	0	V
7	REF	7.	0	V
8	REF	78.	0	V
9	REF	789.	0	V
./to	REF	789.	0	V
0	REF	789.0	0	V
+/-	REF	-789.0	0	V
DIM	REF	-789.0	0	W
STO	REF	Err	0	W
	REF	-789.0		W
INP	FRQ/Hz	-789.0	0	
SPEC		SPEC		

3.1.2.3 Checking the IEC-Bus Interface

For this check the response of the URV5 to a few selected IEC-bus commands is tested.

The following list contains a complete test program for the R&S Process Controller PUC in the left column, the response of the URV5 and readouts on the display in the centre column and a brief description of the individual test steps in the right column. The information contained in the table will enable the users of other controllers to write their own test program.

With the exception of test step 5, the URV5 may be set to any address. In the example described, "9" has been selected. For test step 5 the URV5 must be switched to TALK ONLY mode.

Prior to the test the probes must be removed from the basic unit and the URV5 be initialized (e.g. briefly switched off and on again). The delimiter of the controller must be set to "CR+NL".

Step No.	PUC test program	Response on URV5/PUC *	Description
1	100 IECLAD 9	REM lights	Addressing
	110 IECSDC	"HAllo" is displayed "HAllo" goes out "----- V" lights	Selected Device Clear
	120 IECUNL		Unaddressing
	130 STOP		
2	200 IECOUT 9, "Q1"		SRQ ON
	210 IECOUT 9, "X1"	SRQ lights	Trigger
	220 IECIN 9, A$		Output string in A$
	230 PRINT A$	URV5 NO PROBES *	Printout on display
	240 IECSRQ GOTO 270		Branch instruction if SRQ is detected
	250 IECOUT 9, "QØ"		SRQ OFF
	260 GOTO 300		
	270 IECSPL 9, V%	SRQ goes out	Serial Poll
	280 PRINT V%	104 *	Printout of SRQ byte
	290 IECRETSRQ		Return instruction of SRQ subroutine
	300 STOP		
3	400 IECTERM 1		Delimiter EOI
	410 IECOUT 9, "SØ";	All display elements light	Special function Ø
		REM lights "----- V" lights	
	420 IECTERM Ø		Delimiter CR+NL
	430 STOP		
4	500 IECOUT 9, "Q1"		SRQ ON
	510 IECLAD 9		Addressing
	520 IECGXT	SRQ lights	Group Execute Trigger
	530 IECUNL		Unaddressing
	540 IECIN 9, A$		Output string in A$
	550 PRINT A$	URV5 NO PROBES *	Printout on display
	560 IECSRQ GOTO 590		Branch instruction if SRQ is detected

Step No.	PUC test program	Response on URV5/PUC *	Description
(4)	570 IECOUT 9, "QØ" 580 GOTO 620 590 IECSPL 9, V% 600 PRINT V% 610 IECRETSRQ 620 STOP	 SRQ goes out 104 *	SRQ OFF Serial Poll Printout of SRQ byte Return instruction of

For test step 5 the URV5 must be set to TALK ONLY mode.

Sequence of keys

LOCAL/TALK
SHIFT
SPEC
1
./to
STO

Step No.	PUC test program	Response on URV5/PUC *	Description
5	700 IEC←ERR 710 IEC$IN A$ 720 IF ST<>0 THEN 710 730 PRINT A$ 740 GOTO 710	 URV5 NO PROBES *	PUC programmed as listen-only device Read loop: Upon each pressing of LOCAL/TALK key the string shown in centre column is output on the display

3.1.2.4 Checking the Probe Interface

The co-functioning of the measuring heads and the basic unit can be checked by means of the following test. First set the URV5 to LOCAL mode by means of

key	IEC-bus command (PUC)
	IECLAD 9
LOCAL/TALK	IECGTL
	IECUNL

and remove both probes from the unit. ("-----" must appear on the display.)

For the check connect (any) probe to channel A. After a certain response time measured values should be read out on the display and key A must light. Remove the probe and check the display ("-----").

Repeat the test for channel B. With the probe inserted, key B must light.

3.1.2.5 Checking the Accuracy of DC Measurements

The output voltage of a DC calibrator is measured by the URV5 with the aid of a DC Probe URV5-Z1 (Fig. 3-1).

Settings on URV5:		
	Channel A	DC Probe URV5-Z1
	Channel B	---------
	Readout	V
	Filter	F2
	Autorange	On

Settings on
DC calibrator: 0 V ±10 µV
±1 V/+10 V/+100 V/+400 V ±0.01%

The permissible tolerances for the indicated values are specified in the performance test report. Repeat the corresponding test steps for channel B.

3.1.2.6 Checking the Accuracy of AC Measurements

In the following tests the AC measurement accuracy of the basic unit URV5 is determined by measuring the output voltage of an AC calibrator with the aid of an RF Probe URV5-Z7 or a 10-V Insertion Unit URV5-Z2 (Fig. 3-2). Care should be taken that the interfering voltage of the AC calibrator determined by broadband measurement does not exceed 200 µV. Otherwise a divider or low-pass filter must be provided at the output of the calibrator. In this connection please refer also to section 2.3.2.2.1, where measurement of low RF voltages is described in detail.

Settings on URV5:	Channel A	URV5-Z7 (URV5-Z2)
	Channel B	----------
	Readout	V
	Filter	F2
	Autorange	on
Settings on AC calibrator:	0.2 mV	10 Hz

With this calibrator setting, zero adjustment of the URV5 is triggered first. Due to the low frequency, only the residual interfering voltage is measured and eliminated like an offset error.

After the zero adjustment the frequency is set to 100 kHz (200 kHz with RF probe) and the output voltage measured at the following values:

0.2 mV/10 mV/100 mV/1 V/10 V

The permissible tolerances for the indicated values are specified in the performance test report.

Repeat the corresponding test steps for channel B.

Please carry out the measurements in the stated sequence. After the measurement of high voltages the RF probes require a certain recovery time before low levels can be measured again.

3.1.2.7 Checking the PEAK (PEP) Function

In the following test the peak power of a keyed sinewave signal and the deviation from the continuous-wave power of the non-keyed signal are determined. The measurements can be carried out either with Probe URV5-Z7 or with the 10-V Insertion Unit URV5-Z2 (Fig. 3.3). The waveform generator must be able to produce sinewave bursts.

Settings on URV5:	Channel A	URV5-Z7 (URV5-Z2)
	Channel B	----------
	Readout	W (Δ dB)
	Z	50 Ω
	Filter	F2
	Autorange	on
	PEAK (PEP)	off

Settings on
waveform generator: Output signal sinewave (non-keyed)
Frequency 100 kHz

The displayed power is set to approx. 20 mW and is stored.

The waveform generator is then switched for sinewave bursts (pulse duration 2 ms, period 10 ms), the amplitude being kept constant, and the peak power is measured with the URV5 set to PEAK (PEP) function. The readout is switched to Δ dB.

Compare the deviation from the power of the non-keyed signals with the tolerances specified in the performance test report.

R&S
Millivoltmeter URV5
Ident No.: 394.8010.02
Serial No.: .....

Date: .....

Name: .....

Ref. No.	Characteristic	Measured to section	Min	Actual	Max	Unit
1	Self-test	3.1.2.1	--		--	
2	Functional check of displays and keyboard	3.1.2.2	--		--	
3	Checking the IEC-bus interface	3.1.2.3	--		--	
4	Checking the probe interface	3.1.2.4	--		--	
5	Checking the accuracy of DC measurements in channel A	3.1.2.5				
	0 V		-0.0005	.....	+0.0005	V
	+ 1 V		+0.9970	.....	+1.0030	V
	- 1 V		-0.9970	.....	-1.0030	V
	+ 10 V		+ 9.974	.....	+10.026	V
	+100 V		+ 99.74	.....	+100.26	V
	+400 V		+ 397.9	.....	+ 402.1	V

Ref. No.	Characteristic	Measured to section	Min	Actual	Max	Unit
6	Checking the accuracy of DC measurements in channel B	3.1.2.5				
	0 V		-0.0005	.....	+0.0005	V
	+ 1 V		+0.9970	.....	+1.0030	V
	- 1 V		-0.9970	.....	-1.0030	V
	+ 10 V		+ 9.974	.....	+10.026	V
	+100 V		+ 99.74	.....	+100.26	V
	+400 V		+ 397.9	.....	+ 402.1	V
7	Checking the accuracy of AC measurements in channel A	3.1.2.6				
	Zero adjustment		———	.....	———	
	0.2 mV		0.155	.....	0.245	mV
	10 mV		9.897	.....	10.103	mV
	100 mV 100 kHz (200 kHz)		98.97	.....	101.03	mV
	1 V		0.9897	.....	1.0103	V
	10 V		9.897	.....	10.103	V
8	Checking the accuracy of AC measurements in channel B	3.1.2.6				
	Zero adjustment		———	.....	———	
	0.2 mV		0.155	.....	0.245	mV
	10 mV		9.897	.....	10.103	mV
	100 mV 100 kHz (200 kHz)		98.97	.....	101.03	mV
	1 V		0.9897	.....	1.0103	V
	10 V		9.897	.....	10.103	V
9	Checking the PEAK (PEP) function	3.1.2.7	-0.05	.....	+0.05	ΔdB

3.2 RF Probe URV5-Z7

3.2.1 Required Measuring Equipment and Accessories

Ref. No.	Designation	Required specification	R&S Type	For use, see section
1	AC calibrator	200 µV to 10 V ±0.1% 200 kHz		3.2.2.1
2	Sinewave/waveform generator	1 V sinewave 10 MHz d < 1 %		3.2.2.2
3	20-dB divider for RF probe			3.2.2.2
4	BNC adapter for RF probe			3.2.2.1 3.2.2.2
5	Basic unit URV5			3.2.2.1 3.2.2.2

3.2.2 Checking the Rated Specifications

3.2.2.1 Checking the Linearity

In the following test the output voltage of an AC calibrator is measured at a frequency of 200 kHz with the aid of the RF probe (Fig. 3-2). Care should be taken that the interfering voltage of the AC calibrator determined by broadband measurement does not exceed 200 µV. Otherwise a divider or lowpass filter must be provided at the output. In this connection please refer also to section 2.3.2.2.1, where measurement of low RF voltages is described in detail.

Settings on URV5:	Channel A (B)	URV5-Z7
	Readout	V
	Filter	F2
	Autorange	on

Settings on AC calibrator:	0.2 mV	10 Hz

With this calibrator setting, zero adjustment is triggered if the RF probe is connected. Due to the low frequency, the voltage of 0.2 mV is not considered; only the residual interfering voltage is measured and eliminated like an offset error.

After the zero adjustment the frequency is set to 200 kHz and the output voltage measured at the following values:

0.2 mV; 3 mV; 10 mV; 30 mV; 100 mV; 0.3 V; 1 V; 3 V; 10 V

The permissible tolerances are specified in the performance test report. Please carry out the measurements in the stated sequence. After measurement of high voltages the RF probe requires a certain recovery time before low levels can be measured again.

3.2.2.2 Checking the Input Capacitance

The input capacitance of the RF probe has a considerable influence on the dividing error if a 20-/40-dB divider is used. To check the input capacitance, it is recommended to check the division ratio in conjunction with a 20-dB divider. The adjustment error of the divider is so minimal that it can be neglected with respect to the error caused by the input capacitance.

The output signal of a sinewave generator is measured first without and then with 20-dB divider (Fig. 3-4). The permissible division ratio is shown in the performance test report. The output voltage of the sinewave generator is adjusted to approximately 1 V_{rms}/10 MHz. Care should be taken that the distortion does not exceed 1% since otherwise weighting errors in the same order of magnitude will have to be expected.

Settings on URV5:	Channel A (B)	URV5-Z7
	Readout	V (X/REF)
	Filter	F2
	Autorange	on

The measurement is first to be carried out without divider, the measured value to be stored as reference value and the readout then be switched to X/REF for the measurement with divider.

3.2.3 Performance Test Report

R&S
RF Probe URV5-Z7
Ident No.: 395.2615.02
Serial No.: .....

Date: .....

Name: .....

Ref. No.	Characteristic	Measured to section	Min	Actual	Max	Unit
1	Checking the linearity	3.2.2.1				
	Zero adjustment		———	.....	———	
	0.2 mV		0.155	.....	0.245	mV
	3 mV		2.962	.....	3.038	mV
	10 mV		9.897	.....	10.103	mV
	30 mV		29.67	.....	30.33	mV
	100 mV 200 kHz		98.97	.....	101.03	mV
	0.3 V		0.2967	.....	0.3033	V
	1 V		0.9897	.....	1.0103	V
	3 V		2.967	.....	3.033	V
	10 V		9.897	.....	10.103	V
2	Checking the input capacitance	3.2.2.2	0.0890	.....	0.1110	X/REF

3.3 10-V Insertion Unit 50 Ω URV5-Z2

3.3.1 Required Measuring Equipment and Accessories

Ref. No.	Designation	Required specifications	R&S Type	For use, see section
1	AC calibrator	200 µV to 10 V ±0.1% 100 kHz		3.3.2.1
2	Basic unit URV5			3.3.2.1
3	Reflection coefficient test set	100 MHz to 2 GHz Directivity >46 dB	see 3.8	3.3.2.2
4	Termination 50 Ω N male	VSWR < 1.01 up to 2 GHz		3.3.2.2

3.3.2 Checking the Rated Specifications

3.3.2.1 Checking the Linearity

In the following test the output voltage of an AC calibrator is measured at 100 kHz with the aid of the 10-V insertion unit (Fig. 3-2). Care should be taken that the interfering voltage of the AC calibrator determined by broadband measurement does not exceed 200 µV. Otherwise a divider or lowpass filter must be provided at the output. In this connection please refer also to section 2.3.2.2.1, where measurement of low RF voltages is described in detail.

Settings on URV5:	Channel A (B)	URV5-Z2
	Readout	V
	Filter	F2
	Autorange	on
Settings on AC calibrator:	0.2 mV	10 Hz

With this calibrator setting, zero adjustment is triggered if the insertion unit is connected. Due to the low frequency, the voltage of 0.2 mV is not considered; only the residual interfering voltage is measured and eliminated like an offset error.

After the zero adjustment the frequency is set to 100 kHz and the output voltage measured at the following values:

0.2 mV; 3 mV; 10 mV; 30 mV; 100 mV; 0.3 V; 1 V; 3 V; 10 V

The permissible tolerances are specified in the performance test report. Please carry out the measurements in the stated sequence. After measurement of high voltages the insertion unit requires a certain recovery time before low levels can be measured again.

3.3.2.2 Checking the Reflection Coefficient

Linearity and reflection coefficient are characteristic data of the 10-V insertion unit. If both are within the specifications, the frequency response will also be within the specified tolerances.

For measuring the reflection coefficient any test set up to 2 GHz and a directivity of at least 46 dB will be suitable. The measurement level is uncritical, since it has only little influence on the reflection coefficient. The 10-V insertion unit to be tested is terminated at one end by 50 Ω for low reflection; for the measurement result it is irrelevant whether the insertion unit is connected to the basic unit or not. Care should be taken that the reflection coefficient of the 50-Ω termination does not exceed 0.5%.

The permissible reflection coefficient tolerances for the 10-V insertion unit are specified for 100 MHz to 2 GHz in the performance test report.
These tolerances do however not include the measurement error of the test set used. Please check first what reflection coefficients you can still measure with sufficient accuracy. The following example should be helpful. A test set with a directivity of 46 dB already yields an uncertainty of ±0.5%. Together with the reflection coefficient of the termination of 0.5%, the entire test set has a measurement error of ±1%. Therefore, only reflection coefficients > 3% can reliably be determined. Consequently, the reflection coefficient of the 10-V insertion unit can only be checked for frequencies above 500 MHz.

A test set for measuring the reflection coefficient up to 2 GHz and with a directivity of 46 dB is described in section 3.8. It contains the R&S VSWR Bridge ZRB2 and a URV5 with two RF probes.

3.3.3 Performance Test Report

R&S
10-V Insertion unit 50 Ω URV5-Z2
Ident No.: 395.1019.55
Serial No.: .....

Date: .....
Name: .....

Ref. No.	Characteristic	Measured to section	Min	Actual	Max	Unit
1	Checking the linearity	3.3.2.1				
	Zero adjustment		———	.....	———	
	0.2 mV		0.155	.....	0.245	mV
	3 mV		2.962	.....	3.038	mV
	10 mV		9.897	.....	10.103	mV
	30 mV		29.67	.....	30.33	mV
	100 mV 100 kHz		98.97	.....	101.03	mV
	0.3 V		0.2967	.....	0.3033	V
	1 V		0.9897	.....	1.0103	V
	3 V		2.967	.....	3.033	V
	10 V		9.897	.....	10.103	V
2	Checking the reflection coefficient	3.3.2.2				
	100 MHz *		--	.....	1	%
	200 MHz *		--	.....	1	%
	500 MHz *		--	.....	2	%
	1 GHz		--	.....	7	%
	1.6 GHz		--	.....	10	%
	2.0 GHz		--	.....	15	%

* Note measurement error!

3.4 100-V Insertion Unit 50 Ω URV5-Z4

3.4.1 Required Measuring Equipment and Accessories

Ref. No.	Designation	Required specifications	R&S Type	For use, see section
1	AC calibrator	2 mV to 10 V ±0.3% 1 MHz 100 V ±0.1% 200 kHz		3.4.2.1
2	Basic unit URV5			3.4.2.1
3	Reflection coefficient test set	100 MHz to 2 GHz Directivity > 46 dB	see 3.8	3.4.2.2
4	50-Ω termination N male	VSWR < 1.01 up to 2 GHz		3.4.2.2

3.4.2 Checking the Rated Specifications

3.4.2.1 Checking the Linearity

In the following test the output voltage of an AC calibrator is measured with the aid of the 100-V insertion unit from 2 mV to 10 V at 1 MHz and with 100 V at a frequency of 200 kHz (Fig. 3-2). The relatively low frequency of 200 kHz in the last measurement causes only a slight deterioration of the measuring accuracy, since the lower cutoff frequency of all AC probes strongly decreases with increasing voltage.

Although the 100-V insertion unit is less sensitive by a factor of 10 than the RF probe and the 10-V insertion unit, care should be taken when setting up the test set that broadband interferences will not invalidate the measurement results (see section 2.3.2.2.1).

Settings on URV5:	Channel A (B)	URV5-Z4
	Readout	V
	Filter	F2
	Autorange	on
Settings on AC calibrator:	2 mV	10 Hz

With this calibrator setting, zero adjustment is triggered if the insertion unit is connected. Due to the low frequency the voltage of 2 mV is not considered; only the residual interfering voltage is measured and eliminated like an offset error.

After the zero adjustment the frequency is set to 1 MHz and the output voltage measured at the following values:

2 mV; 30 mV; 100 mV; 0.3 V; 1 V; 3 V; 10 V

The measurement is then carried out at 100 V and 200 kHz. The permissible tolerances are entered in the performance test report. Please carry out the measurements in the stated sequence. After measurement of high voltages the insertion unit requires a certain recovery time before low levels can be measured again.

3.4.2.2 Checking the Reflection Coefficient

Linearity and reflection coefficient are characteristic data of the 100-V insertion unit. If both are within the specifications, the frequency response will also be within the specified tolerances.

Measurement of the reflection coefficient of the 100-V insertion unit is slightly critical, since 3% is not exceeded over the entire frequency range. The measurement must therefore be carried out particularly carefully. The test set used should have a directivity of at least 46 dB. The measurement level is uncritical, since it has practically no influence on the reflection coefficient. The insertion unit to be tested is terminated at one end by 50 Ω for low reflection; for the measurement result it is irrelevant whether the insertion unit is connected to the basic unit or not. Care should be taken that the reflection coefficient of the 50-Ω termination does not exceed 0.5%.

The permissible reflection coefficient tolerances for the 100-V insertion unit are specified for 100 MHz to 2 GHz in the performance test report. These tolerances do however not include the measurement error of the test set used. Please check first what reflection coefficients you can still measure with sufficient accuracy. The following example should prove to be helpful. A test set with a directivity of 46 dB yields already an uncertainty of ±0.5%. Together with the reflection coefficient of the termination of 0.5%, the entire test set has a measurement error of ±1%. Therefore, only reflection coefficients > 3% can reliably be determined. Consequently, the reflection coefficient of the 100-V insertion unit can only be checked for frequencies above 1 GHz.

A test set for measuring the reflection coefficient up to 2 GHz and with a directivity of 46 dB is described in section 3.8. It contains the R&S VSWR Bridge ZRB2 and a URV5 with two RF probes.

3.4.3 Performance Test Report

R&S
100-V Insertion Unit 50 Ω URV5-Z4
Ident No.: 395.1619.55
Serial No.: .....

Date: .....

Name: .....

Ref. No.	Characteristic	Measured to section	Min	Actual	Max	Unit
1	Checking the linearity	3.4.2.1				
	Zero adjustment		———	.....	———	
	2 mV		1.54	.....	2.46	mV
	30 mV		29.47	.....	30.53	mV
	100 mV		98.47	.....	101.53	mV
	0.3 V 1 MHz		0.2952	.....	0.3048	V
	1 V		0.9847	.....	1.0153	V
	3 V		2.952	.....	3.048	V
	10 V		9.847	.....	10.153	V
	100 V 200 kHz		98.47	.....	101.53	V
2	Checking the reflection coefficient	3.4.2.2				
	100 MHz *		--	.....	1	%
	200 MHz *		--	.....	1	%
	500 MHz *		--	.....	1	%
	1 GHz *		--	.....	2	%
	1.6 GHz		--	.....	3	%
	2.0 GHz		--	.....	3	%

* Note measurement error!

3.5 100-V Insertion Unit 75 Ω URV5-Z4

3.5.1 Required Measuring Equipment and Accessories

Ref. No.	Designation	Required specifications	R&S Type	For use, see section
1	AC calibrator	2 mV to 10 V ±0.3% 1 MHz 100 V ±0.1% 200 kHz		3.5.2.1
2	Basic unit URV5			3.5.2.1
3	Reflection coefficient test set	100 MHz to 2 GHz Directivity > 46 dB		3.5.2.2
4	75-Ω termination N male	VSWR < 1.01 up to 2 GHz		3.5.2.2

3.5.2 Checking the Rated Specifications

3.5.2.1 Checking the Linearity

In the following test the output voltage of an AC calibrator is measured with the aid of the 100-V insertion unit from 2 mV to 10 V at 1 MHz and with 100 V at a frequency of 200 kHz (Fig. 3-2). The relatively low frequency of 200 kHz in the last measurement causes only a slight deterioration of the measuring accuracy, since the lower cutoff frequency of all AC probes strongly decreases with increasing voltage.

Although the 100-V insertion unit is less sensitive by a factor of 10 than the RF probe and the 10-V insertion unit, care should be taken when setting up the test set that broadband interferences will not invalidate the measurement results (see section 2.3.2.2.1).

Settings on URV5:	Channel A (B)	URV5-Z4
	Readout	V
	Filter	F2
	Autorange	on
Settings on AC calibrator:	2 mV	10 Hz

With this calibrator setting, zero adjustment is triggered if the insertion unit is connected. Due to the low frequency the voltage of 2 mV is not considered; only the residual interfering voltage is measured and eliminated like an offset error.

After the zero adjustment the frequency is set to 1 MHz and the output voltage measured at the following values:

2 mV; 30 mV; 100 mV; 0.3 V; 1 V; 3 V; 10 V

The measurement is then carried out at 100 V and 200 kHz. The permissible tolerances are entered in the performance test report. Please carry out the measurements in the stated sequence. After measurement of high voltages the insertion unit requires a certain recovery time before low levels can be measured again.

3.5.2.2 Checking the Reflection Coefficient

Linearity and reflection coefficient are characteristic data of the 100-V insertion unit. If both are within the specifications, the frequency response will also be within the specified tolerances.

Measurement of the reflection coefficient of the 100-V insertion unit is slightly critical, since 5% is not exceeded over the entire frequency range. The measurement must therefore be carried out particularly carefully. The test set used should have a directivity of at least 46 dB. The measurement level is uncritical, since it has practically no influence on the reflection coefficient. The insertion unit to be tested is terminated at one end by 75 Ω for low reflection; for the measurement result it is irrelevant whether the insertion unit is connected to the basic unit or not. Care should be taken that the reflection coefficient of the 75-Ω termination does not exceed 0.5%.

The permissible reflection coefficient tolerances for the 100-V insertion unit are specified for 100 MHz to 2 GHz in the performance test report. These tolerances do however not include the measurement error of the test set used. Please check first what reflection coefficients you can still measure with sufficient accuracy. The following example should prove to be helpful. A test set with a directivity of 46 dB yields already an uncertainty of ±0.5%. Together with the reflection coefficient of the termination of 0.5%, the entire test set has a measurement error of ±1%. Therefore, only reflection coefficients > 3% can reliably be determined. Consequently, the reflection coefficient of the 100-V insertion unit can only be checked for frequencies above 1 GHz.

3.5.3 Performance Test Report

R&S
100-V Insertion Unit 75 Ω URV5-Z4
Ident No.: 395.1619.75
Serial No.: .....

Date: .....
Name: .....

Ref. No.	Characteristic	Measured to section	Min	Actual	Max	Unit
1	Checking the linearity	3.5.2.1				
	Zero adjustment		——	.....	——	
	2 mV		1.54	.....	2.46	mV
	30 mV		29.47	.....	30.53	mV
	100 mV		98.47	.....	101.53	mV
	0.3 V 1 MHz		0.2952	.....	0.3048	V
	1 V		0.9847	.....	1.0153	V
	3 V		2.952	.....	3.048	V
	10 V		9.847	.....	10.153	V
	100 V 200 kHz		98.47	.....	101.53	V
2	Checking the reflection coefficient	3.5.2.2				
	100 MHz *		--	.....	1.5	%
	200 MHz *		--	.....	1.5	%
	500 MHz *		--	.....	2	%
	1 GHz		--	.....	3	%
	1.6 GHz		--	.....	5	%
	2.0 GHz		--	.....	5	%

* Note measurement error!

3.6 DC Probe URV5-Z1

3.6.1 Required Measuring Equipment and Accessories

Ref. No.	Designation	Required specifications	R&S Type	For use, see section
1	DC calibrator	1 V to 400 V ±0.01%		3.6.2.1
2	Basic unit URV5			3.6.2.1

3.6.2 Checking the Rated Specifications

3.6.2.1 Checking the Measurement Accuracy

The output voltage of a DC calibrator is measured with the aid of the DC Probe URV5-Z1 (Fig. 3-1).

Settings on URV5:	Channel A (B)	URV5-Z1
	Readout	V
	Filter	F2
	Autorange	on

Settings on DC calibrator: 0 V ±10 µV
±1 V/+10 V/+100 V/+400 V ±0.01%

The permissible tolerances are specified in the performance test report.

3.6.3 Performance Test Report

R&S
DC Probe URV5-Z1
Ident No.: 395.0512.02
Serial No.: .....

Date: .....

Name: .....

Ref. No.	Characteristic	Measured to section	Min	Actual	Max	Unit
1	Checking the measurement accuracy	3.6.2.1				
	0 V		-0.0005	.....	+0.0005	V
	+ 1 V		+0.9970	.....	+1.0030	V
	- 1 V		-0.9970	.....	-1.0030	V
	+ 10 V		+ 9.974	.....	+10.026	V
	+100 V		+ 99.74	.....	+100.26	V
	+400 V		+ 397.9	.....	+ 402.1	V

3.7 Checking the Frequency Response of RF Probes

Due to the narrow tolerances of the RF probes, frequency response measurements are extremely difficult and should therefore only be carried out with suitable test sets.

Similar to power meters, all RF probes are calibrated to the rms value of the voltage corresponding to the incident power:

$$V = \sqrt{Z \times P_i}$$

The power P_i can be determined with the aid of corresponding test sets. The connections of the insertion units and of the probe for these measurements are shown in Fig. 3-5.

Since - unlike microwave power meters - all RF probes measure voltages, the following should be observed:

1. The reflection coefficient of the connected terminations (probes and insertion units) causes a measurement error of the same amount due to the VSWR on the test line. A reflection coefficient of 1% for instance causes a measurement error of ±1%.

2. The distortion of the test signal causes at higher voltages measurement errors of the same order of magnitude. This is due to the characteristic of the detector, which at high voltages provides for a peak evaluation of the input signal. Therefore, either a low-distortion generator (d < 0.5%) must be used for the frequency response measurements or the measurements be carried out at low level. With an input voltage of 30 mV_{rms} (300 mV_{rms} for the 100-V insertion units) this effect can be neglected.

3.8 Test Setup for Measurement of Reflection Coefficient

The URV5 and the VSWR Bridge ZRB2, Mod. 52, can be combined to form an accurate and low-priced test setup for measurement of reflection coefficients in the frequency range 10 MHz to 2 GHz (Fig. 3-6). Due to the high directivity of the VSWR bridge (> 46 dB), the measurement error for low reflection coefficients is only ±(0.5% + 10% of rdg). The test setup is therefore suitable for checking the reflection coefficient of URV5 probes from approximately 500 MHz and above. The output power of the sweep generator may be between 0 and +26 dBm.

In the test setup according to Fig. 3-6 the URV5 measures the ratio of reflected and incident power and reads out the result as reflection coefficient or return loss. The reflected power is determined by means of the power sensor in the main measurement channel (B in Fig. 3-6), the incident power by means of the 100-V insertion unit in the second channel. Since even with total reflection only part of the input power will be transmitted to the bridge output, the transmission loss must also be considered in the measurement. The transmission loss is 13 dB and almost independent of frequency. The transmission loss is entered as attenuation correction value +13 dB for the main measurement channel (section 2.3.5.3). In both channels the selected unit is V. In the relative readout mode X/REF the reflection coefficient is directly indicated (1% = 0.01), in the ΔdB mode the return loss (in dB). It is not recommended to determine the transmission loss by means of a short circuit or open circuit, since with reflection coefficients > 30% the VSWR at the bridge input and, hence, the measurement error strongly increases.

URV5 settings tabularized:

	Channel B	Channel A
Autorange	on	on
Unit	V	V
Measurement speed	F2	F2
Attenuation correction	+13 dB	------
Relative readout	ΔEXT X/REF (ΔdB)	

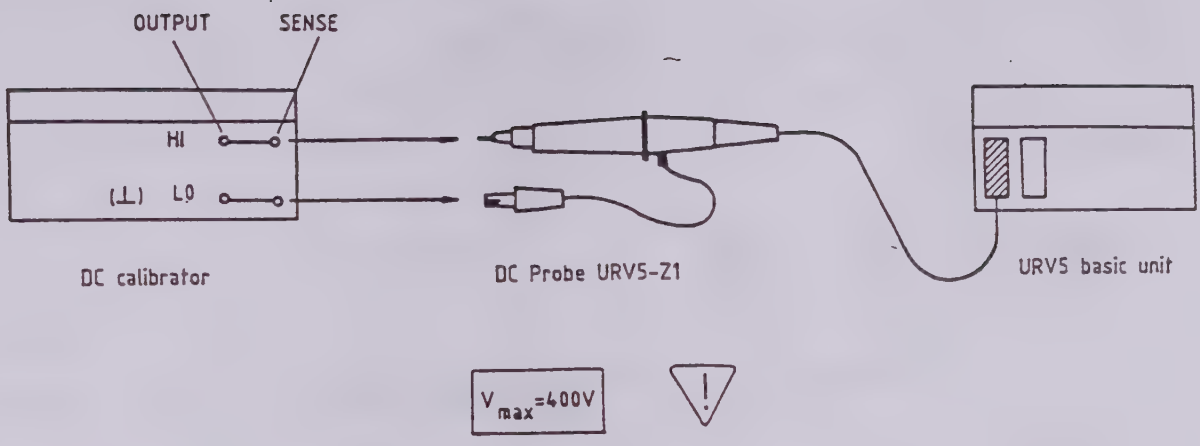

Fig. 3-1 Checking the DC measurement accuracy

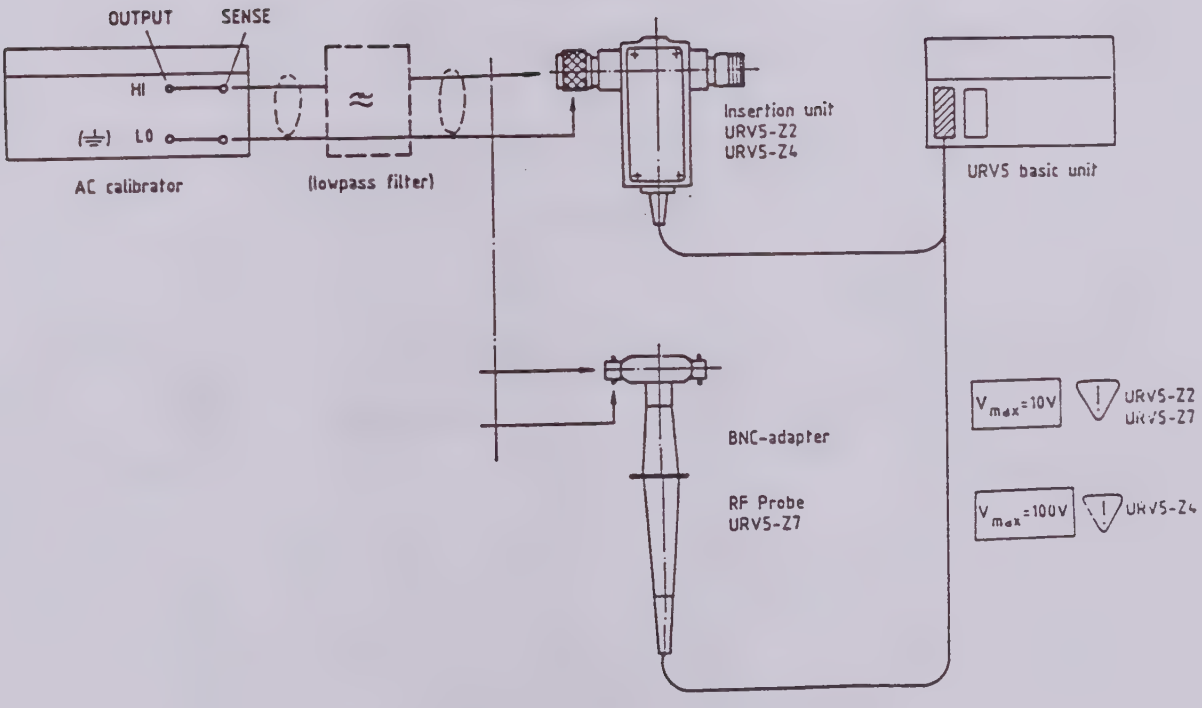

Fig. 3-2 Checking the AC measurement accuracy

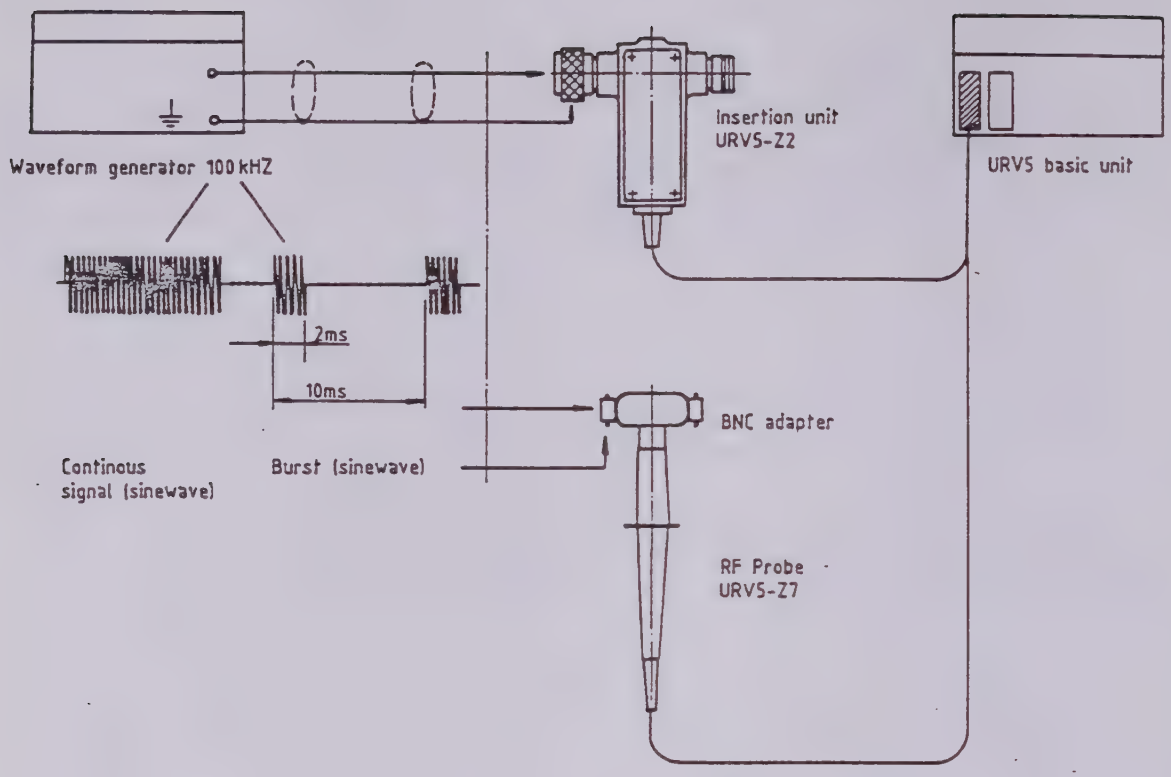

Fig. 3-3 Checking the PEAK (PEP) function

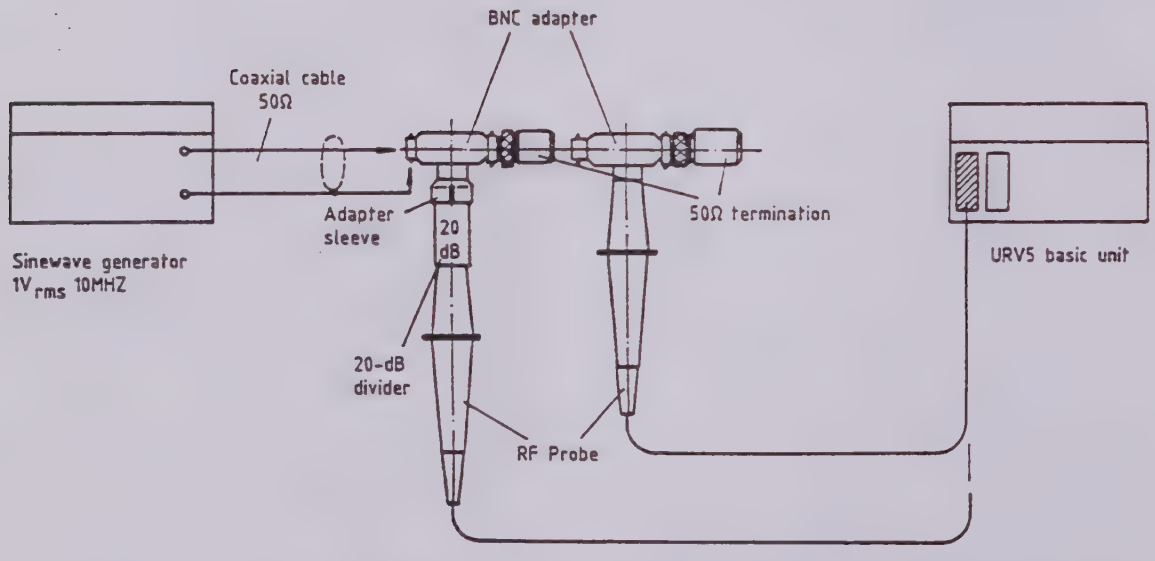

Fig. 3-4 Checking the input capacitance

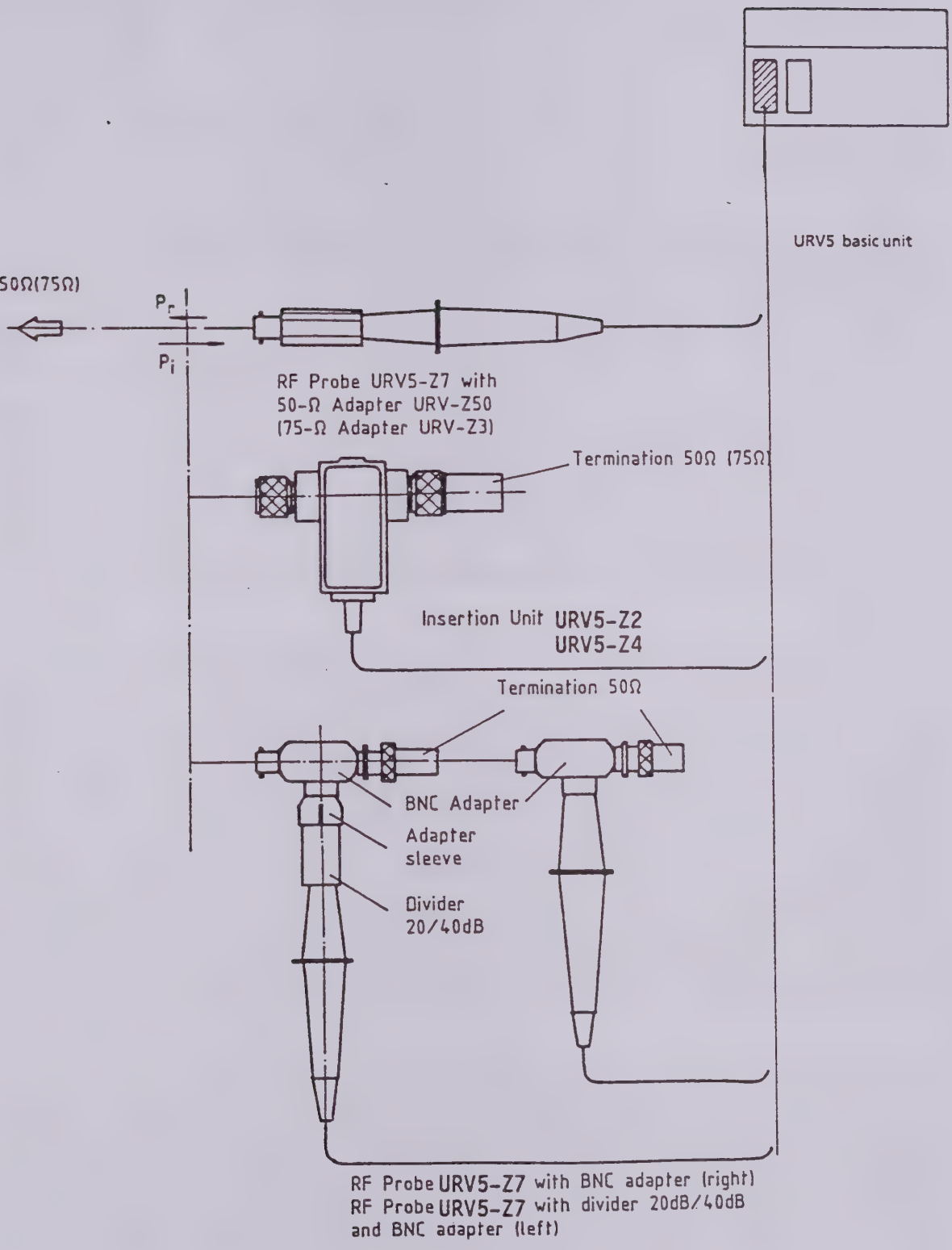

Fig. 3-5 Connection of RF probes for frequency response measurements

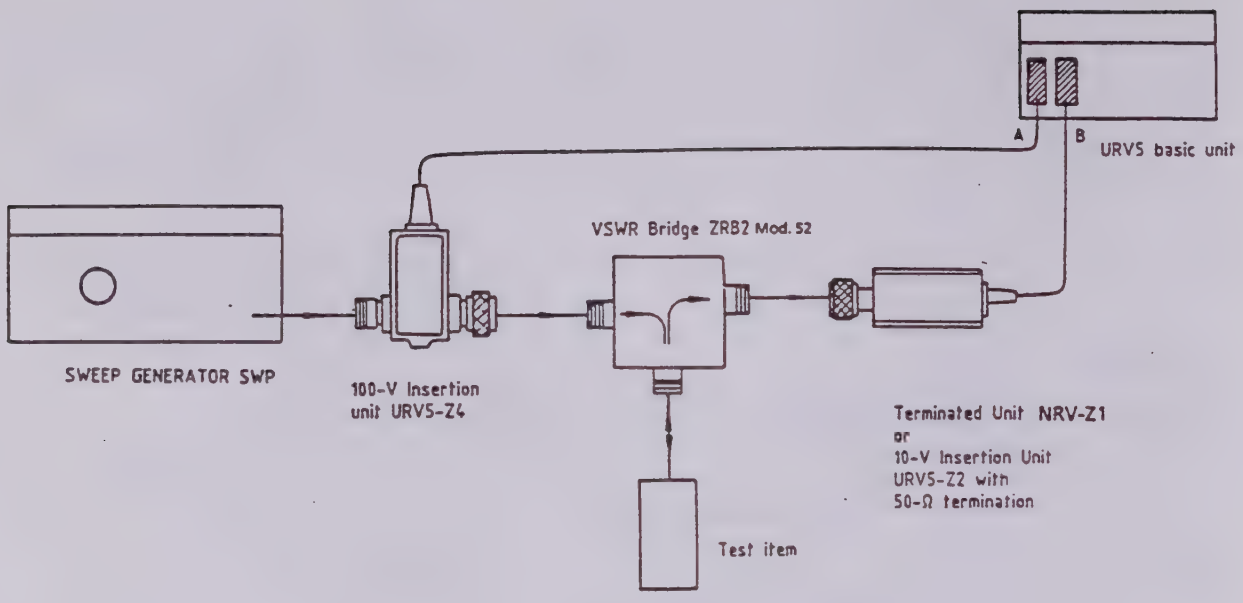

Fig. 3-6 Test setup for measurement of reflection coefficient

4 Service Instructions for Total Unit

Note the remarks referring to the Service Kit UZ-8 in Section 3 Maintenance.

4.1 Circuit Description

The figures in parenthesis () refer to Fig. 4-1.

The URV5 consists of the basic unit with analog board, computer and display, plus one or two measuring heads. These may be allocated via the connector board either to channel A or B. Both channels can be set and read out independently of each other. The measurements are alternately carried out at intervals of 5 to 20 ms via an integrating A/D converter. The results are processed and filtered almost exclusively in the computer.

Since for reasons of reliability and serviceability neither the analog board nor the measuring heads contain any components that have to be adjusted, all tolerances are considered purely by calculation. The correction values for the analog board are stored in an EEPROM (43) of the computer, the characteristic data of the measuring head in an EPROM (52) which is integrated in the connector case of the measuring head.

4.1.1 Analog Board

(See Fig. 4-1 and circuit diagram 394.8610 S)

The analog board mainly consists of amplifiers for the two measuring heads, an A/D converter (25) preceded by a multiplexer (23), and a drive circuit for the analog switches and the data memories (52). All settings are made from the computer via an 8-bit optocoupler interface (34). The data transmission from the analog board to the computer is effected in purely serial form via a single optocoupler (33). Due to the multiplexer (26) preceding the A/D converter, either the result of the A/D conversion, the content of the data memories (52) or the status of the probe detector (27) can be transmitted. The probe detector contains a R/S flipflop for each of the two measurement channels, which is set by removing a probe from the URV5.

For AC voltage measurements with the RF probes, insertion units or power sensors two separate but completely identical DC voltage amplifiers are provided. This is to achieve a high crosstalk attenuation of modulated signals and a short switchover time between the two channels. For measurements with the DC probe a single amplifier is used for both channels. Switchover is effected by means of the multiplexer (10) which precedes the amplifier.

4.1.1.1 AC Probe Amplifiers A and B

In these two amplifiers the signal rectified in the probes is boosted so that it can be applied to the A/D converter. The output signal delivered from the probes is bipolar and referred to circuit ground. Due to the square-law characteristic of the rectifier at low input voltages the probe amplifiers must handle a dynamic range of the rectified voltage. For input voltages of 200 μV_{rms} to 10 V_{rms} (2 mV_{rms} to 100 V_{rms} for the 100-V insertion units) the output voltage of the probes is ±700 nV to ±14 V.

The amplifiers can be switch-selected in four steps corresponding to the measurement ranges 10 mV/100 mV/1 V/10 V (100 mV/1 V/ 10 V/100 V for 100-V insertion units). In the two most sensitive ranges the signal is not attenuated and applied to the meter amplifier (8, 18) where it is further boosted. In the other measurement ranges the signal is first attenuated by approx. 30 dB in the dividers (5, 6, 15, 16). The total gain is as follows:

Measurement range	10 (100) mV	0.1 (1) V	1 (10) V	10 (100) V
Divider	x1	x1	x0.0216	x0.0216
Amplifier	x476	x16	x57.2	x5.75
Total gain	x476	x16	x1.24	x0.124

The figures in parenthesis refer to the 100-V insertion units.

Switchover of the amplifiers is effected by means of the analog multiplexers D202/D302 and the FETs V205 to V212 or V305 to V312. For offset determination the two amplifier inputs in the two less sensitive measurement ranges are cyclically connected to ground via V208/V209 and V308/V309. In the other measurement ranges the polarities of the input voltage are cyclically interchanged with the aid of the FETs V205/V206/V211/V212 and V305/ V306/V311/V312 and a bridge chopper is simulated by subtraction of successive measurement results.

The FETs V203/204 and V303/V304 limit the input signal for the multiplexer to max. ±2 V, without loading the rectifier circuit.

With the aid of the FETs V201/V202/V214 and V301/V302/V314 the discharge resistance for the rectifier of approx. 10 MΩ (R205 to R208, R305 to R308) can be reduced to approx. 0.5 MΩ. In particular at high input voltages, when the rectifier operates as peak-value meter, the measurement speed can thus considerably be increased. Prior to each measurement, the discharge circuit is actuated for a few ms in the measurement ranges 1 V and 10 V (10 V and 100 V).

The meter amplifier (8, 18) consists of a low-noise FET input stage (V218, V318) and a high-gain operational amplifier (N201, N301). The drain currents of V218/V318 are kept constant by N202I and N302I. In order to avoid a limitation of the dynamic range of the amplifier by too high offset voltages of V218/V318 in the most sensitive measurement range, the offset voltage can be adjusted via D203/D303 in 128 steps of 400 µV each. The adjustment is made when the instrument is switched on and follows the principle of successive approximation. In addition, the offset voltage is monitored during the measurement and - if necessary - corrected in steps up or down.

4.1.1.2 DC Probe Amplifier A/B

This subassembly operates in conjunction with the precision resistor of the DC probe (9 MΩ) as an inverting amplifier. The gain can be adjusted in four steps via D402:

Measurement range	1 V	10 V	100 V	400 V
Gain	3.33	0.333	0.0333	0.00333

Via the multiplexers D401 and D404 either channel A, channel B or circuit ground (via R403, R404) can be selected. The two non-used inputs are connected to ground with low impedance via R401/R402/R410. This is to achieve a high crosstalk attenuation between the two measurement channels. The offset is determined via R403/R404 in each measurement. With the aid of D403 the input current of the circuit can be adjusted in 128 steps accurately to ±10 pA. The adjustment is made when the instrument is switched on and follows the principle of successive approximation. In addition, the input current is monitored during the measurement and - if necessary - corrected in steps up or down. The input current can be calculated by the microprocessor from the difference of the offset voltages with different connection of the input. With one setting, the inverting input of N401 is connected to circuit ground via R403/R404 (9 MΩ), with the other via R423 (4.75 kΩ).

4.1.1.3 Peak-value Meter

This PC board enables in conjunction with the AC probes peak-value measurement of modulated or pulsed RF signals (PEAK). The circuit consists of the input buffer N501I, AGC amplifier N502, holding capacitor C501, output buffer V505/N501II and MOSFET V504. With a blocked channel, V504 acts like a diode with low leakage current and charges C501 up to the peak value of the input signal. With conductive channel, V504 acts as an ohmic resistance of approx. 200 Ω and the entire circuit operates as a buffer between multiplexer D501 and A/D converter.

4.1.1.4 A/D Converter

This PC board consists of the pulse-width modulator (N506, N507, D502) and the counting and evaluation logic circuit (D511). The A/D conversion is effected so that first the input DC voltage (X502.2) is converted into a pulse-modulated squarewave signal (X507.3) whose pulse width is measured in the counting circuit. The counting clock is 4.096 MHz. The pulse-modulated signal is the result of a control process, in the course of which the mark-to-space ratio is varied until the sum of currents at the inverting input of N506 is reduced to zero. N506 is used as an integrator and three currents are applied to its inverting input:

1. Input current (R513), a linear function of the input DC voltage.

2. Reference pulse current (R515), proportional to the reference voltage (X507.1) and to the mark-to-space ratio of the pulse-modulated squarewave signal.

3. Drive current 4 kHz (R516) for generation of a triangular output signal (X507.2).

As long as the arithmetical mean of the sum of the three currents is not zero, the triangular output signal is shifted in positive or negative direction and the time interval between the zero-axis crossings of this signal is thus varied. The comparator N507, which detects these zero-axis crossings, thus varies the mark-to-space ratio of its output signal. After synchronization to the counting clock this output signal is the above pulse-modulated squarewave signal, which now in turn varies the reference pulse current via D502 so that the mean input current of the integrator disappears. As soon as an unbalance is obtained due to the variation of the input voltage, the mark-to-space ratio will be varied until the reference pulse current again compensates the input current.

The integration time of the A/D converter can be adjusted in steps of 250 µs and is selected as a function of the desired resolution or measurement speed. The whole process is controlled by the microprocessor which reads in the measurement result in serial form via the optocoupler (33).

4.1.1.5 Analog Switch Decoder (30)

The status of each analog switch is stored in an addressable latch (D101 to D104, D203, D303, D403). If there is a change, the corresponding switch will be addressed via the lines AØ to A5. The required status is transmitted via A6. The status is entered into the latch by a brief logic H pulse on the SOD line. The input $\overline{G}$ (Enable) of the corresponding chip is thus activated via the 1-out-of-8 decoder D105.

A few control inputs of the A/D converter are directly controlled via the address lines.

4.1.2 Computer (33, ..., 44, 48, 58)

(See Fig. 4-1 and circuit diagram 349.1910 S)

The core is a CPU of Type 8085 with the following addressable chips:

Symbol	Designation	Address range
D5	EPROM 32k	ØØØØ to 7FFF H
D6	no chip implemented	
D32	RAM 4k (8k chip)	8ØØØ to 8FFF H
D11	IEC-bus chip	9ØØØ to 9ØØ7 H
D2	Output port analog board	AØØØ
D4	Display chip	BØØØ to BØØ1 H
D8	EPROM 2k	CØØØ to C7FF H
	Analog output	DØØ1H, DØØ2 H

"Chip select" is effected via the decoders D25 or D30/D31. Chip D3 operates as address latch for the least-significant byte.

The interrupt inputs of the microprocessor are connected as follows:

Symbol	Chip
RST5.5	Display chip
RST6.5	IEC-bus chip
RST7.5	IEC-bus chip (activated when GXT is received)
TRAP	Timer D4/D22 (balanced squarewave signal 2 Hz)

For writing into the EEPROM a programming pulse of 12 ms duration is produced in the monoflop D21. For the duration of the programming pulse the program run is inhibited via the READY input of the CPU.

The optocoupler interface is driven via the port D2 and the SOD output of the CPU. The data transmitted from the analog board to the computer are read into the SID input of the microprocessor in serial form.

4.1.3 Power Supply (35, 38, 48, 58)

(See Fig. 4-1 and circuit diagram 349.1910 S, Bl. 2)

The following supply voltages are generated for the URV5:

Voltage	Test point	Use
+5 V	X11	Power supply for computer/display
+5 V	X12	Power supply for analog board (digital section)
+15 V	X13	" " "
-15 V	X14	" " "

The supply voltages for the analog board and the computer are referred to safety ground potential.

When the instrument is switched on, the reset circuit V10/D20 furnishes a reset pulse (active L) of approx. 120 ms duration.

4.1.4 DC-Output (Option URV5-B2)

(See Fig. 4-1 and circuit diagram 395.0112 S)

This module contains a 12-bit D/A converter which is cyclically controlled via the address/data bus in step with the rate of the display. The 12-bit information is composed as follows:

Bits 1 to 4 are derived via latch D2 from the four least-significant bits of the address word, bits 5 to 12 are identical with the data word transmitted via the lines ADØ to AD7 (latch D3).

The output voltage range is -2.048 to +2.047 V. The adjustment via R5 and R9 is described in the service kit UZ-8.

The supply voltage of ±15 V for the D/A converter is derived from the 5-V supply for the computer via a DC/DC converter (D5, V7, V8, Z1) and via the two voltage stabilizers N1 and N2.

4.1.5 Measuring Heads

(See Fig. 4-1 and circuit diagrams 395.0512 S, 395.2680 S, 395.1019 S and 395.1619 S)

The 12-way connector of each measuring head contains a data memory, in which all characteristics and correction values required for the measurement are stored. The data are read out either when the instrument is switched on or when a probe is exchanged. For this purpose the data memory is first connected to the 5-V supply of the analog board via relay K101 and its content is then read out in serial form. The EPROM D12 is addressed via the two cascaded counters D11 and D10 by increasing the address by one after every 8 clock pulses. The parallel-serial conversion of the addressed 8-bit word is effected in the multiplexer D13 which upon each clock pulse (X10.7) addresses the next higher bit. The two counters D10/D11 are reset by logic H via X10.9 at the beginning of the read-out process. The "chip enable" for the EPROM D12 (logic L) is also effected via X10.9. The data memories are driven by the addressable latch D101 on the analog board. The clock pulses are jointly produced for both probes (D101.10), reset/chip enable separately, i.e. for channel A at terminal D101.9, for channel B at terminal D101.11. The outputs of the data memories are taken separately for the two channels to the multiplexer (26) (D508).

With the aid of the probe detector (27) it is possible to recognize whether a probe has been inserted in the basic unit or removed from it. The probe detector basically consists of an R/S flipflop for each of the channels A and B, which with non-operative channel is set by the corresponding pull-up resistor (R523, R524). With a probe inserted, the set input is kept at logic L level via the resistor R13 (data memory).

4.1.5.1 RF Probe URV5-Z7

The RF probe is made up of a full-wave rectifier which is capacitively coupled to the test input and supplies two rectified voltages of the same amount but with opposite polarity. The rectified voltages are further boosted in the basic unit by the probe amplifiers A or B. In order to compensate for the relatively strong temperature-dependence of the rectifier diodes, the temperature is measured in the vicinity of the rectifier diodes by means of the sensor V3 and is then considered in the microprocessor calculations. V3 acts like a Zener diode with temperature-dependent break-down voltage and is cyclically switched on only for a few milliseconds (N503.2) in order to minimize errors caused by selfheating.

4.1.5.1.1 20-/40-dB Dividers

The dividers that can be plugged onto the probe tip form in conjunction with the input capacitance of the probe a capacitive divider. Due to the greater base capacitance the 40-dB divider can already be used at 500 kHz, whereas the 20-dB divider can only be used at 1 MHz and above. The dividers are preferrably used for measuring high voltages or for measurements with low load capacitance. The input capacitance of the probe with 40-dB divider is 0.5 pF only, with 20-dB divider it is 1 pF. (this is without BNC adapter).

4.1.5.1.2 50-/75-Ω Adapters

With the aid of the two adapters and the RF probe, low-reflection RF voltage measurements can be carried out in 50-/75-Ω systems. The adapters contain a 50-/75-Ω termination which is connected to the inner and outer conductor and to which the probe tip is connected via matching pads. The reflection coefficients specified for the adapters are only valid with the probe inserted.

4.1.5.2 10-V Insertion Unit URV5-Z2

This measuring head is of similar design as the RF probe. It mainly differs in the greater frequency range. The lower measurement limit is reduced to approx. 9 kHz by the coupling capacitance of 10 nF.

4.1.5.3 100-V Insertion Units URV5-Z4

In these measuring heads a capacitive divider designed as tubular divider is connected ahead of the rectifier. Due to the low base capacitance resulting from the circuit design, the lower frequency limit is higher than for the probe and 10-V insertion unit.

4.1.5.4 DC Probe URV5-Z1

The DC probe contains a 9-MΩ precision resistor as input resistance for the inverting amplifier (20).

4.2 Mechanical Construction

The URV5 is housed in a compact R&S cabinet and easy to service. Quick access to all PC boards is ensured.

Analog Board

After removing the lower instrument cover (4 Phillips screws) and the screen cover the component side of the analog board is accessible. To remove the screen cover, which simply rests in the screen walls at both sides, pull the cover first outwards and then up (by putting two fingers into the holes provided).

When the analog board is swung out the wiring side becomes also accessible. To do this, first remove the multi-way connector from the input and loosen the two Phillips screws (at the end looking toward the frontpanel). Now the board can be swung out. The lower screen cover can be removed after undoing the centre Phillips screw.

Processor (+ IEC-bus interface + power supply)

The component side of the PC board is accessible after the upper instrument cover has been removed (four Phillips screws). The soldered side can only be reached after removing the PC board itself. To do this withdraw the multi-way connectors from the analog board and the display, and the connectors from the power transformer and the voltage selector (at the rear). Now loosen the computer board from the subchassis (two Phillips screws) and from the rear panel (2 hex-head screws, spanner width 9/32)

Display

Remove the upper and lower instrument covers after loosening each time 4 Phillips screws, withdraw the multi-way connectors from the display to the processor and the analog board. Remove the front panel by loosening the four Phillips screws from the two side profiles. Remove display board from the front panel (4 Phillips screws).

Power transformer + power switch + voltage selector/fuse holder/ line filter + 5-V stabilizer

are located at the rear panel and fixed for easy access by screws or snap catches.

DC Output (option URV5-B2)

The subassembly is snapped on to the processor board and can simply be demounted.

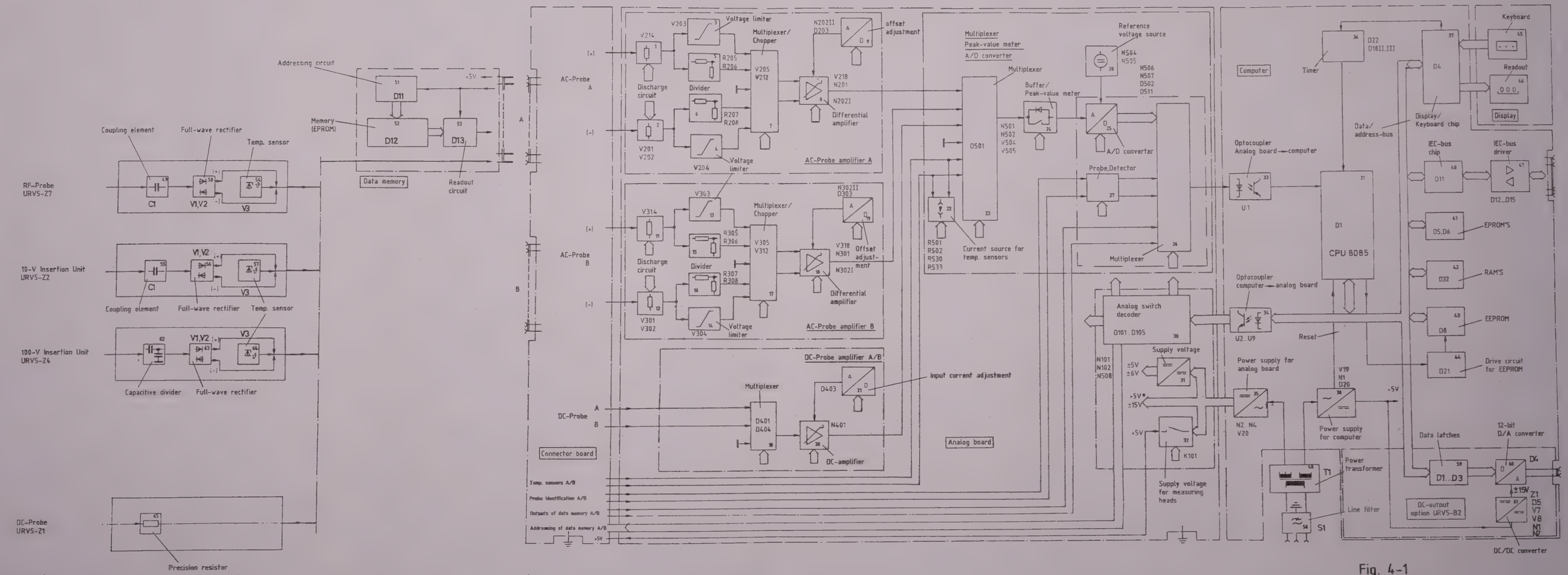
Addressing circuit
Memory (EPROM)
Data memory
Readout circuit
Coupling element
Full-wave rectifier
Temp. sensor
RF-Probe URV5-Z7
10-V Insertion Unit URV5-Z2
100-V Insertion Unit URV5-Z4
Capacitive divider
DC-Probe URV5-Z1
Precision resistor
AC-Probe A
AC-Probe B
DC-Probe
Voltage limiter
Multiplexer/ Chopper
Divider
Discharge circuit
Differential amplifier
offset adjustment
AC-Probe amplifier A
AC-Probe amplifier B
DC-Probe amplifier A/B
DC-amplifier
input current adjustment
Connector board
Analog board
Temp. sensors A/B
Probe identification A/B
Outputs of data memory A/B
Addressing of data memory A/B
Multiplexer
Peak-value meter
A/D converter
Buffer/ Peak-value meter
Reference voltage source
A/D converter
Probe Detector
Current source for temp. sensors
Analog switch decoder
Supply voltage
Supply voltage for measuring heads
Computer
Timer
Keyboard
Readout
Display
Display/ Keyboard chip
Data/ address-bus
Optocoupler Analog board — computer
Optocoupler computer — analog board
IEC-bus chip
IEC-bus driver
CPU 8085
EPROM'S
RAM'S
EEPROM
Drive circuit for EEPROM
Reset
Power supply for analog board
Power supply for computer
Power transformer
Line filter
Data latches
12-bit D/A converter
DC-output option URV5-B2
DC/DC converter

Fig. 4-1

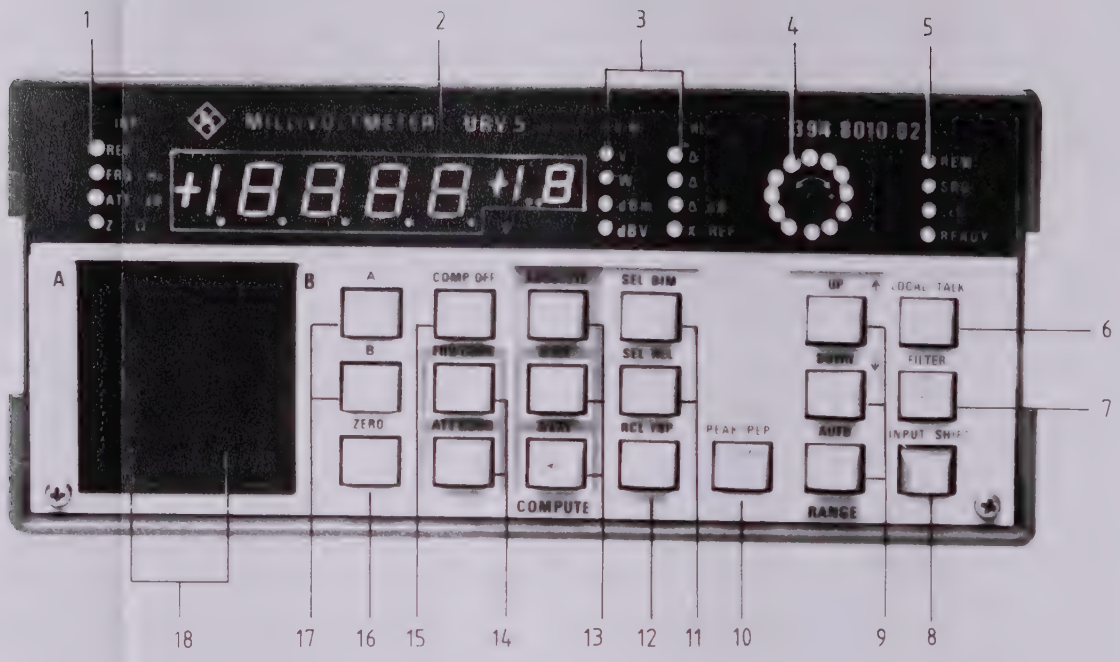

Bild 2-1 Frontansicht
Fig. 2-1 Front view

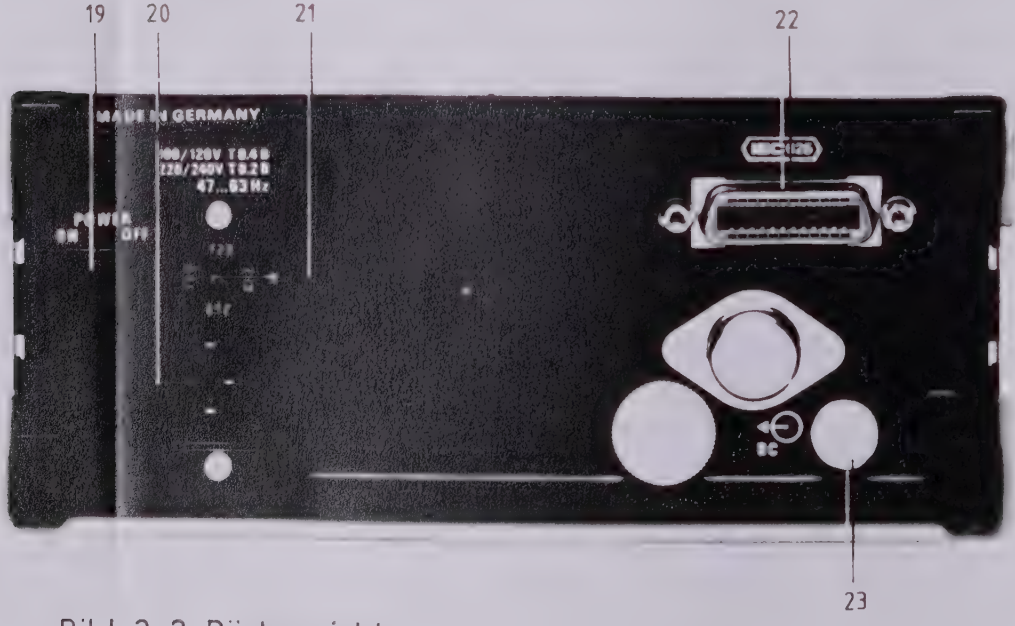

Bild 2-2 Rückansicht
Fig. 2-2 Rear view

ROHDE&SCHWARZ

Liste mechanischer Teile

List of mechanical parts

Bilder zur Liste mechanischer Teile

Figures pertaining to list of mechanical parts

R 44830

Liste zu den Bildern 4-10...4-15

List for Figs 4-10...4-15

Lfd. Nr. / No.	Kenn-zeichen / Unit/ Comp.No	Stück-zahl / Qty	Benennung/Beschreibung / Designation	Sachnummer / Stock No.
1		1	KP Haube perf. oben 2E 1/2 340 Perforated cover, top	079.0177
2		1	KP Stapelleiste Stacking strip	085.6921
3		1	KP Haube perf. unten 2E 1/2 340 Perforated cover, bottom	079.0160
5		4	KF KleingerätefuB Instrument foot	KF 085.7128
6		2	Führungsschiene (kurz) Guide rail (short)	238.3567
7		1	Bedienhinweiskarte 1 URV5 User's.guide 1 (URV5)	394.9516
8		1	Bedienhinweiskarte 2 URV 5 User's guide 2 (URV5)	394.9522
10		1	KF Tragbügel Carrying handle	085.7234
11		2	KP Seitenstreifen L=340 Side panel	085.6915
15		2	KP Seitenwand 2E 305 Side piece	079.0090
16		8	VS Einsetzmutter enth. in Lfd. Nr.15 Insert nut incl. in No.15	078.5798
17		6	KZ Schiebemutter M3 Slide nut	KZ 079.0525

Lfd. Nr.	Kenn-zeichen	Stück-zahl	Benennung/Beschreibung	Sachnummer
No.	Unit/ Comp.No	Qty	Designation	Stock No.
18		2	KZ Schraubklotz Screw block	KZ 292.5206
19		2	M3x20 DIN 7985 A4	VS 081.9110
20		1	Abschirmeinheit Screen	394.8161
21		4	M 3x5 DIN 7985 A4	VS 084.1384
25	A1	1	ED Rechnerplatte Computer board	349.2100.14
26		4	M 2,5 x 10 DIN 7985 A4	VS 088.0053
27		4	2,6 DIN 137	VS 005.0280
28		1	Option URV5-B2 DC Ausgang Option URV5-B2 DC output	395.0112.02
29		4	Abstandshalter 8mm enth. in lfd. Nr.28 Spacer incl. in No.28	292.5106
30	A3	1	ED Analogplatte Analog board	394.8610.02
31		2	M 3x6 DIN 7985 A4	VS 081.9061
32		2	3 DIN 137	VS 005.0296
33		2	M 2,5x16 DIN 7985 A4	VS 088.0076

Lfd. Nr.	Kenn-zeichen	Stück-zahl	Benennung/Beschreibung	Sachnummer
No.	Unit/ Comp.No	Qty	Designation	Stock No.
34		2	2,6 DIN 137	VS 005.0280
35		1	Deckel, unten Panel, bottom	394.8890
36		1	M 2,5x10 DIN 7985 A4	VS 088.0053
37		1	2,6 DIN 137	VS 005.0280
38		1	Deckel, oben Panel, top	394.8878
40		1	Halteplatte Support plate	394.8103
41		1	Leiste Ridge	238.2077
42		4	Gewindeeinsatz M 2,5 L10 Screw insert	VS 078.2453
43		1	Massefeder Earth clip	394.8149
44		2	M 2x3 DIN 7985 A4	VS 088.8354
45	A2	1	ED Anzeige Indicator board	394.8310.02
46		4	M 2,5x6 DIN 7985	VS 088.0030

Lfd. Nr. / No.	Kennzeichen / Unit/Comp.No	Stückzahl / Qty	Benennung/Beschreibung / Designation	Sachnummer / Stock No.
47		4	2,6 DIN 137	VS 005.0280
48		1	Tastenkappensatz Set of caps	394.9216
50		2	Köcher Tubular holder	394.8155
51	A4	1	ED Buchsenplatte Socket board	394.8932.02
52		1	Frontplatte, beschriftet Front panel, engraved	394.8078
53		2	M 3x16 DIN 7985 A4 Spacer for M3	396.5518
54		2	3,2 DIN 433 A4	VS 082.4570
55		1	Fenster, beschriftet, bei VAR 02 Window, engraved for model 02	394.8126
		1	Fenster, beschriftet, bei VAR 32 Window, engraved for model 32	394.8110
56		2	VS Schraube M 3x16 schwarz Screw black	238.2354
57		2	Distanzscheibe, schwarz für M3 Spacer, black for M3	342.1714
60		1	Rückwand, beschriftet Rear panel, engraved	394.8210
61		4	M 3x12 DIN 7985 A4	VS 081.9090

Lfd. Nr.	Kenn-zeichen	Stück-zahl	Benennung/Beschreibung	Sachnummer
No.	Unit/ Comp.No	Qty	Designation	Stock No.
62		4	GuÞwannenfuÞ (klein) Foot for cast-iron panel (small)	238.2683
63	S3	1	SK Netzschalter 2pol Power switch, 2-way	SK 553.2925
64	S1,S2	1	FN Netzfilter und Spannungs-wähler Filter and voltage selector	FN 099.3313
65		2	M 3x10 DIN 7985 A4	VS 081.9084
66		2	3,2 DIN 6797 A2	VS 016.2820
67		2	M 3 DIN 934 A4	VS 016.4398
68		1	4,3 DIN 6797 A2	VS 016.2837
69	X1	1	FV Erdungsstecker 6,3 Earth plug	FV 543.6705
70		1	VS Formschraube M 4x12 Screw	085.1013
75	T1	1	LT Ringkerntrafo 35 VA Ring core transformer	349.2200
76		1	6,4 DIN 6797 A2	VS 016.2866
77		1	M 6 DIN 934 A4	VS 005.0115
78		1	MP Sechskantschutzkappe für SW 10 Hexagonal nut cap	342.1689

Lfd. Nr. / No.	Kenn-zeichen / Unit/ Comp.No	Stück-zahl / Qty	Benennung/Beschreibung / Designation	Sachnummer / Stock No.
80		1	FR 3 pol. Transistorfassung für TO3 3-way transistor socket	FR 513.3343
81	N1	1	BO Spannungsregler +5 V LM 323 K Voltage regulator +5 V	BO 342.1672
82		2	VS Zylinderschraube 6-32 UNCX 5/8"A1 Cheese-head screw	517.8179
83		2	3,5 DIN 137	VS 005.0309
84		1	VL Lötöse für M6 Soldering lug for M6	VL 034.9930
85	W2	1	Kabel enth. in lfd. Nr.28 Cable incl. in No.28	395.0258
86		1	MP Verschlußstopfen Stopper	336.7208
87		1	MP Verschlußstopfen Stopper	545.3410
100		1	Kabel Cable	395.1160
101		1	ED Datenspeicher Data memory	395.2915.02
102		1	MZ Kontaktfeder Contact spring	395.0658
103		1	Unterteil, metallisiert Bottom plate, metal-coated	395.0612
104		1	Oberteil, metallisiert Top plate, metal-coated	395.0635

Lfd. Nr.	Kenn-zeichen	Stück-zahl	Benennung/Beschreibung	Sachnummer
No.	Unit/ Comp.No	Qty	Designation	Stock No.
105		1	M 2x10 DIN 7985 A4	VS 081.8942
106		1	M 2 DIN 934 A4	VS 061.5225
107		4	M 2x6 DIN 7985 A4	VS 081.8920
110	X22	1	FJ Umrüststecker Dezifix B/ Syst.-N, 50 Ω-Ausführung Adapter Dezifix B/N, 50 Ω	395.1954
		1	FJ Umrüststecker Dezifix B/ Syst.-N, 75 Ω-Ausführung Adapter Dezifix B/N, 75 Ω	017.7655
111	X21	1	FJ Umrüstbuchse Dezifix B/ Syst.-N, 50 Ω-Ausführung Adapter Dezifix B/N, 50 Ω	017.5398
		1	FJ Umrüstbuchse Dezifix B/ Syst.-N, 75 Ω-Ausführung Adapter Dezifix B/N, 75 Ω	017.5446
115		1	Deckel, URV5-Z2 VAR 55 Cover plate (URV5-Z2, model 55)	395.1219
		1	Deckel, URV5-Z4 VAR 55 Cover plate (URV5-Z4, model 55)	395.1719
		1	Deckel, URV5-Z4 VAR 75 Cover plate (URV5-Z4, model 75)	395.1725
116		4	M 2x4 DIN 7985 A4	VS 081.8913

Lfd. Nr.	Kenn-zeichen	Stück-zahl	Benennung/Beschreibung	Sachnummer
No.	Unit/ Comp.No	Qty	Designation	Stock No.
120		2	FB Umrüststecker Dezifix B, 50 Ω-Ausführung Adapter Dezifix B, 50 Ω	018.2486
		2	FB Umrüststecker Dezifix B, 75 Ω-Ausführung Adapter Dezifix B, 75 Ω	018.2592
122		2	FA Umrüststecker Dezifix B/ Dezifix A, 50 Ω-Ausführung Adapter Dezifix B/ Dezifix A, 50 Ω	018.1915
124		2	FA Umrüststecker Dezifix B/ Precifix A, 50 Ω-Ausführung Adapter Dezifix B/ Precifix A, 50 Ω	018.1980
126		1	FK Umrüstbuchse Dezifix B/4,1/ 9,5, 50 Ω-Ausführung Adapter Dezifix B/4.1/9.5, 50 Ω	017.8516
127		1	FK Umrüststecker Dezifix B/ 4,1/9,5, 50 Ω-Ausführung Adapter Dezifix B/4.1/9.5, 50 Ω	017.9106

Lfd. Nr.	Kenn-zeichen	Stück-zahl	Benennung/Beschreibung	Sachnummer
No.	Unit/ Comp.No	Qty	Designation	Stock No.
128		1	FK Umrüstbuchse Dezifix B/ Syst. 7/16, 50 Ω-Ausführung Adapter Dezifix B/ conn. 7/16, 50 Ω	017.8739
129		1	FK Umrüststecker Dezifix B/ Syst. 7/16, 50 Ω-Ausführung Adapter Dezifix B/ conn. 7/16, 50 Ω	017.9258
130		1	FJ Umrüstbuchse Dezifix B/BNC, 50 Ω-Ausführung Adapter Dezifix B/BNC, 50 Ω	017.5730
		1	FJ Umrüstbuchse Dezifix B/BNC, 75 Ω-Ausführung Adapter Dezifix B/BNC, 75 Ω	017.5846
131		1	FJ Umrüststecker Dezifix B/BNC 50 Ω-Ausführung Adapter Dezifix B/BNC, 50 Ω	017.7832
132		1	FJ Umrüstbuchse Dezifix B/C, 50 Ω-Ausführung Adapter Dezifix B/C, 50 Ω	017.5530
		1	FJ Umrüstbuchse Dezifix B/C, 75 Ω-Ausführung Adapter Dezifix B/C, 75 Ω	017.5575

Lfd. Nr.	Kenn-zeichen	Stück-zahl	Benennung/Beschreibung	Sachnummer
No.	Unit/ Comp.No	Qty	Designation	Stock No.
133		1	FJ Umrüststecker Dezifix B/C, 50 Ω-Ausführung Adapter Dezifix B/C, 50 Ω	017.7761
134		1	FJ Umrüstbuchse Dezifix B/HN, 50 Ω-Ausführung Adapter Dezifix B/HN, 50 Ω	017.5998
135		1	FJ Umrüststecker Dezifix B/HN, 50 Ω-Ausführung Adapter Dezifix B/HN, 50 Ω	017.7978
136		1	FJ Umrüstbuchse Dezifix B/UHF, 50 Ω-Ausführung Adapter Dezifix B/UHF, 50 Ω	017.5217
		1	FJ Umrüstbuchse Dezifix B/UHF, 75 Ω-Ausführung Adapter Dezifix B/UHF, 75 Ω	017.5252
137		1	FJ Umrüststecker Dezifix B/UHF 50 Ω-Ausführung Adapter Dezifix B/UHF, 50 Ω	017.7384
138		2	FJ Umrüststecker Dezifix B/ Syst. 874B, 50 Ω-Ausführung Adapter Dezifix B/874B syst., 50 Ω	017.9564
140		2	FJ Umrüststecker Dezifix B/ 900-AC, 50 Ω-Ausführung Adapter Dezifix B/900-AC, 50 Ω	017.9706
142		2	FJ Umrüststecker Dezifix B/ Syst. H4, 50 Ω-Ausführung Adapter Dezifix B/H4 syst., 50 Ω	017.9835

Lfd. Nr.	Kenn-zeichen	Stück-zahl	Benennung/Beschreibung	Sachnummer
No.	Unit/ Comp.No	Qty	Designation	Stock No.
170		1	Zubehörsatz Set of accessories	395.0564
171		1	ED Datenspeicher Data memory	395.2915.03
172		1	MZ Kontaktfeder Contact spring	395.0658
173		1	Unterteil, metallisiert Bottom plate, metal-coated	395.0612
174		1	Oberteil, metallisiert Top plate. metal-coated	395.0635
175		1	M 2x10 DIN 7985 A4	VS 081.8942
176		1	M 2 DIN 934 A4	VS 061.5225
181		1	ED Datenspeicher Data memory	395.2915.02
182		1	MZ Kontaktfeder Contact spring	395.0658
183		1	Unterteil, metallisiert Bottom plate, metal-coated	395.0612
184		1	Oberteil, metallisiert Top plate, metal-coated	395.0635
185		1	M 2x10 DIN 7985 A4	VS 081.8942
186		1	M 2 DIN 934 A4	VS 061.5225
190		1	Masseband Earth ribbon	243.9053
191		1	Massekabel Earth cable	241.0620

Lfd. Nr.	Kenn-zeichen	Stück-zahl	Benennung/Beschreibung	Sachnummer
No.	Unit/ Comp.No	Qty	Designation	Stock No.
192		1	Massehülse Earth sleeve	241.0688
193		1	Hakenspitze Hook tip	265.4631
194		1	Anlötspitze Solder tip	265.4648
195		1	Zubehörkasten (ohne Zubehör) Case for accessories (without accessories)	395.2980
196		2	Massehülse Earth sleeve	241.1649
197		1	Vorsteckteiler 20 dB 20-dB divider	241.1510
198		1	Vorsteckteiler 40 dB 40-dB divider	241.1710
200		1	URV-Z3 75 Ω-Adapter 75-Ω adapter	243.9118.70
201		1	FK Übergang Uni 9 / BNC enth. in lfd. Nr.200 Adapter Uni 9 / BNC incl. in No.200	243.9282
202		1	FK Übergang Uni 9 1,6/5,6 enth. in lfd. Nr.200 Adapter Uni 9 - 1.6/5.6 incl. in No.200	
203		1	FK Übergang Uni 9 2,5/6 enth. in lfd. Nr.200 Adapter Uni 9 - 2.5/6 incl. in No.200	243.9260

Lfd. Nr.	Kenn-zeichen	Stück-zahl	Benennung/Beschreibung	Sachnummer
No.	Unit/ Comp.No	Qty	Designation	Stock No.
204		1	URV-Z50 50 Ω-Adapter 50-Ω adapter	394.9816.50
205		1	FJ Kupplung BNC - ST/ST enth. in lfd. Nr.204 Adapter BNC - ST/ST incl. in No.204	FJ 018.4620
206		1	BNC-Adapter BNC adapter	241.1110.02
207		1	Reduzierhülse enth. in lfd. Nr.206 Matching sleeve incl. in No.206	241.1278

URV5

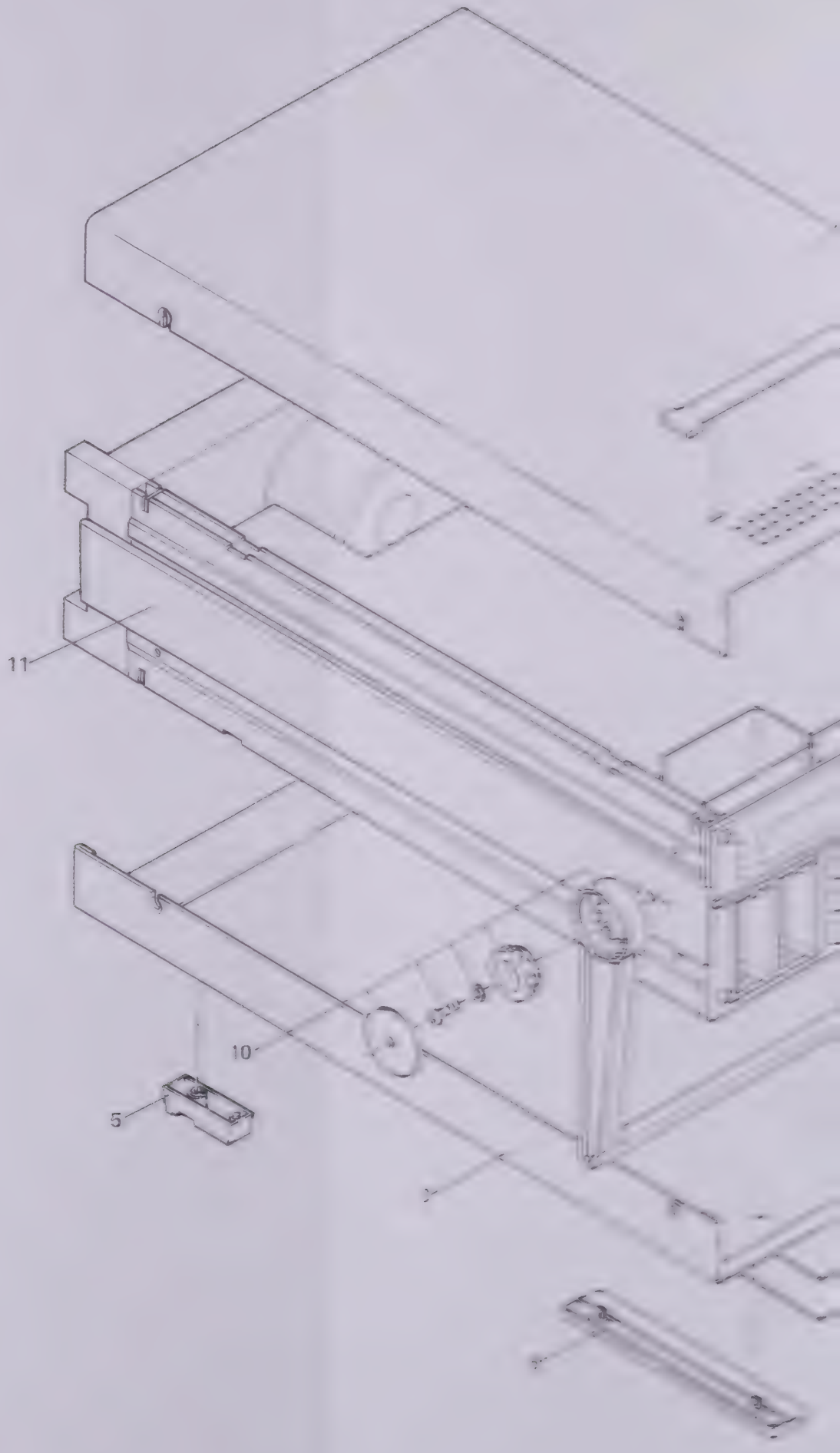

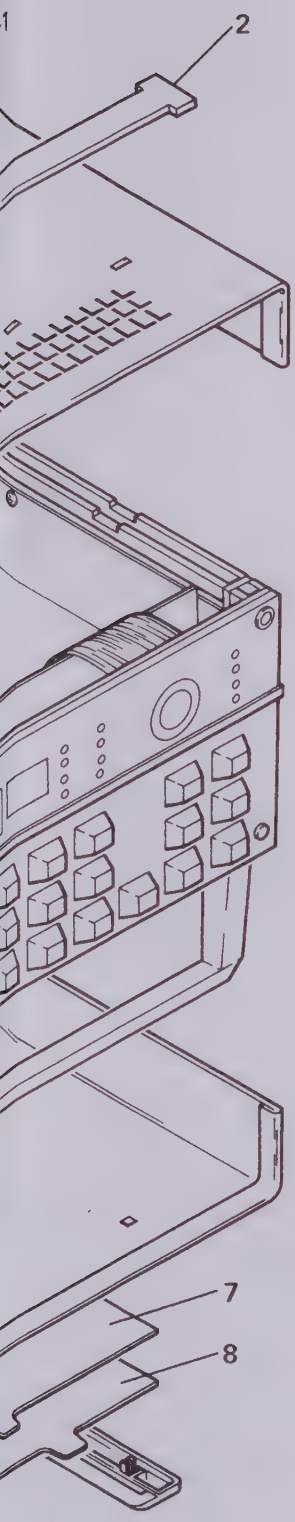

Bild 4 - 10
Fig 4 - 10

URV5

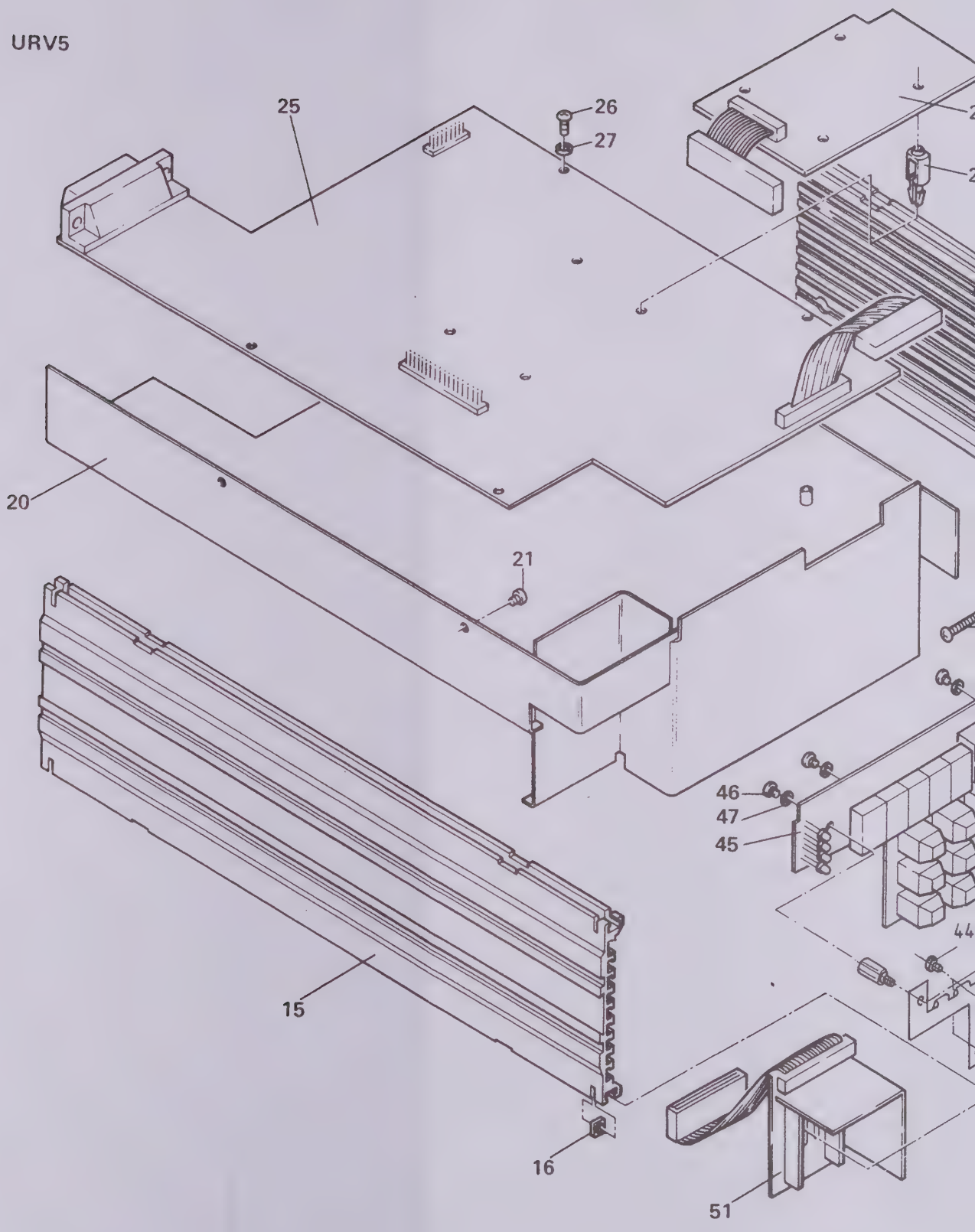

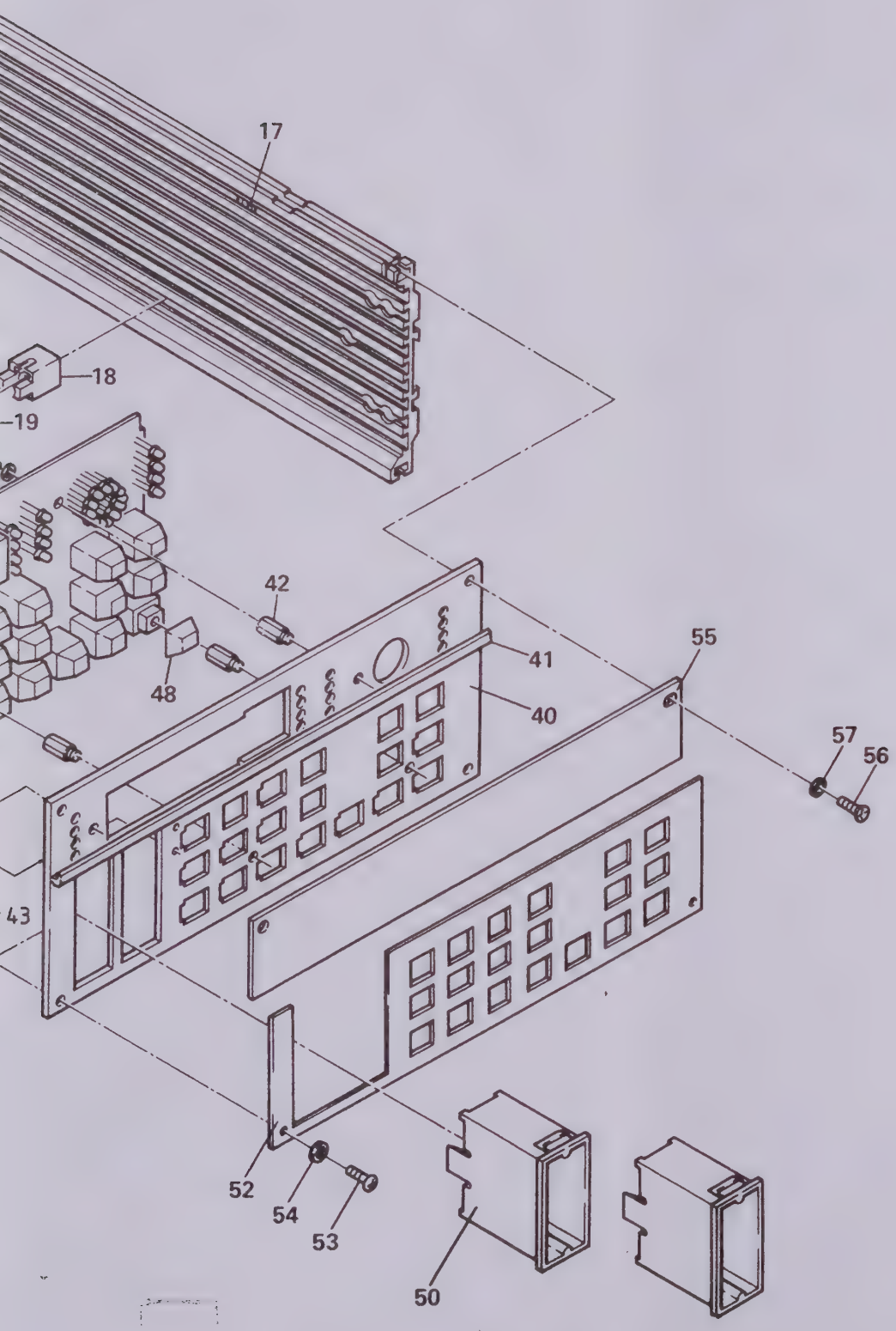

Bild 4 - 11
Fig 4 - 11

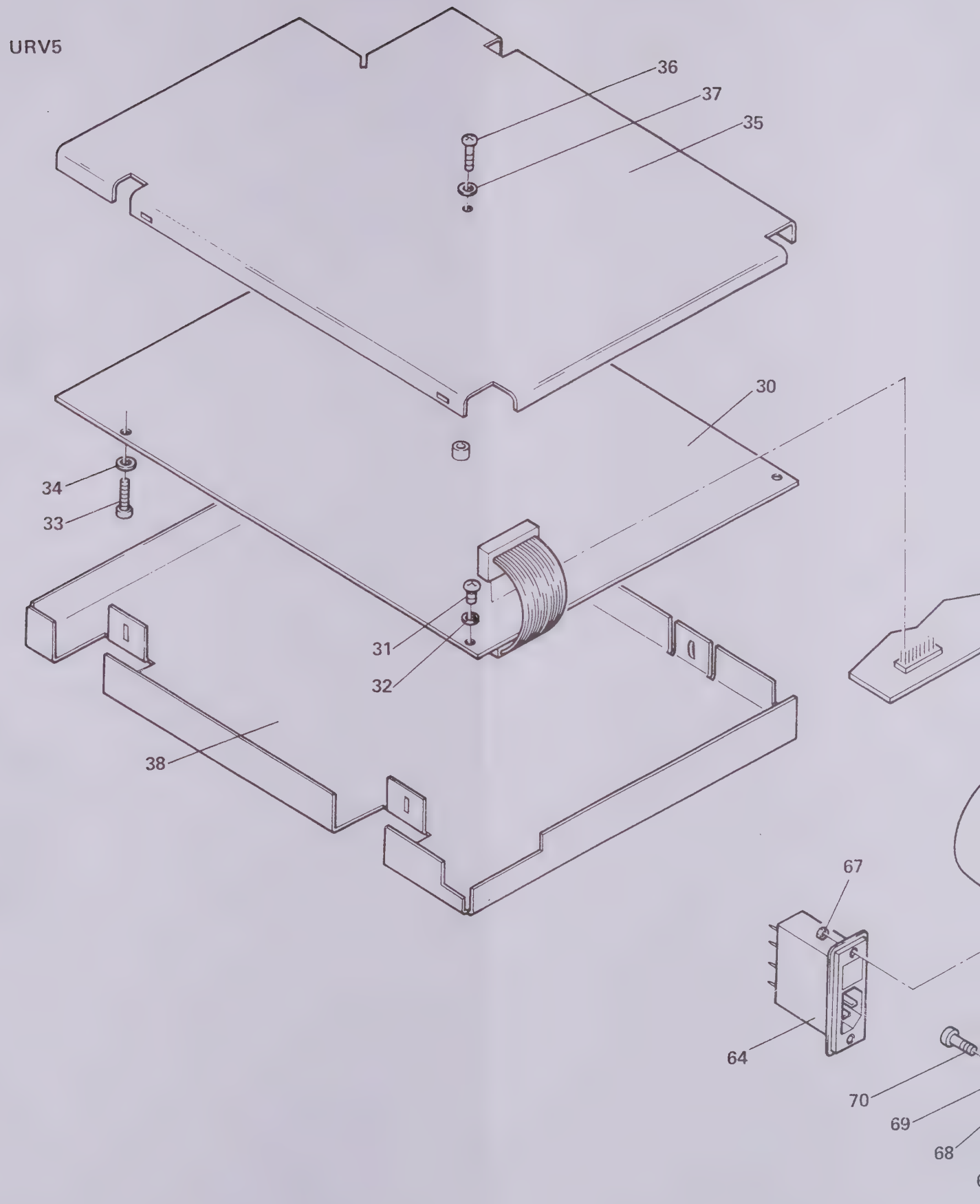
URV5
36
37
35
30
34
33
31
32
38
67
64
70
69
68

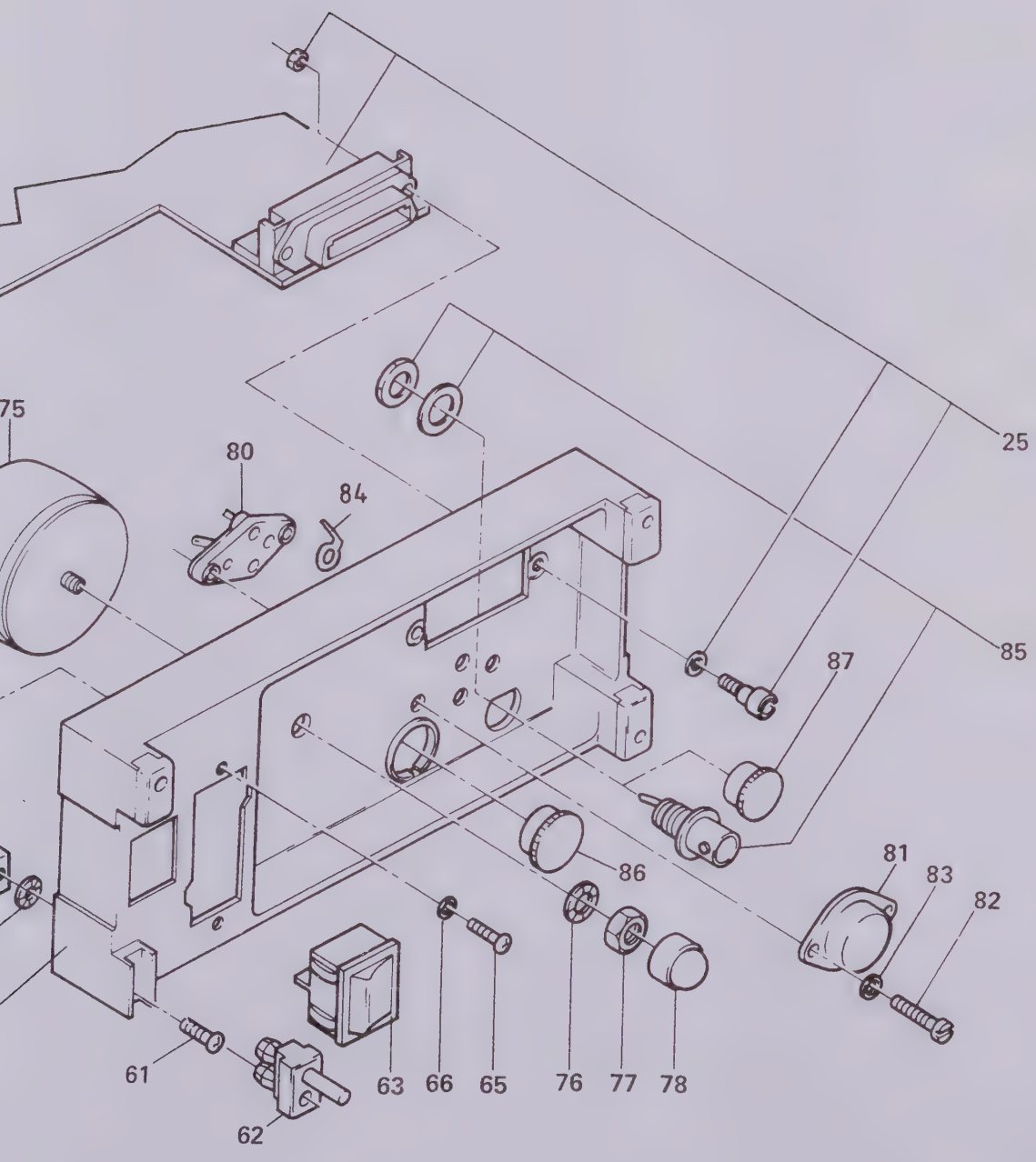

Bild 4 - 12
Fig 4 - 12

URV5 - Z2
URV5 - Z4

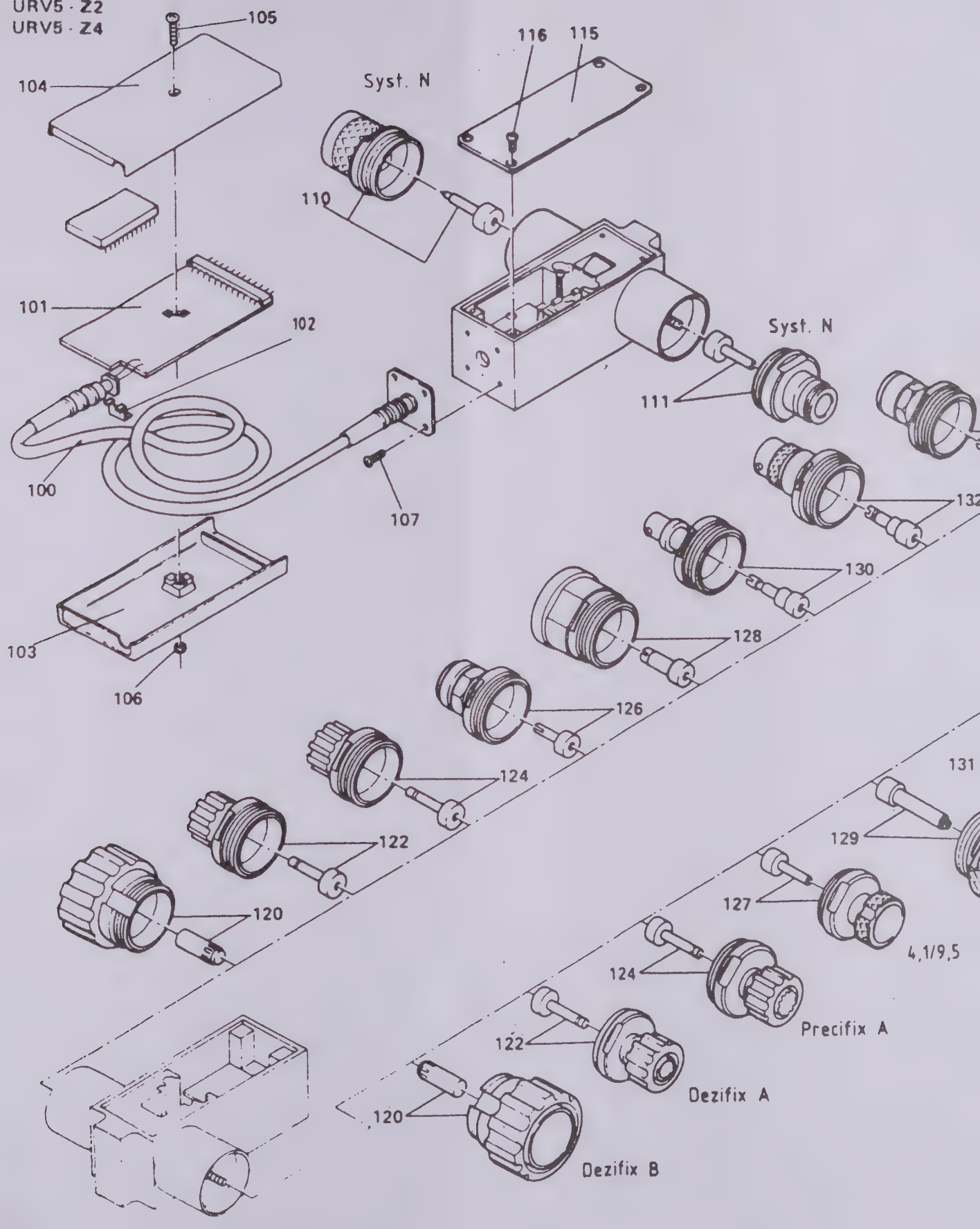

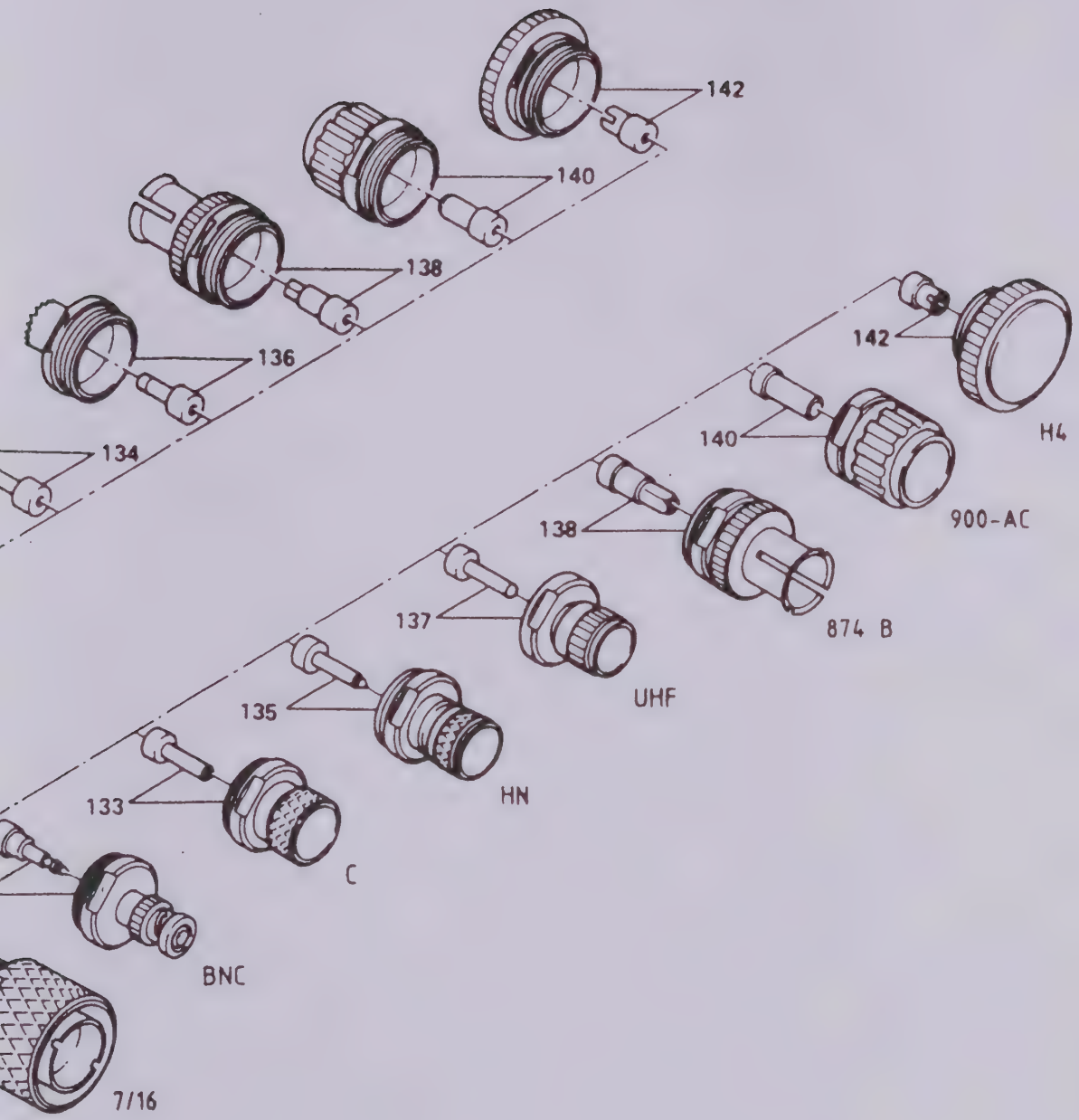

Bild 4 - 13
Fig 4 - 13

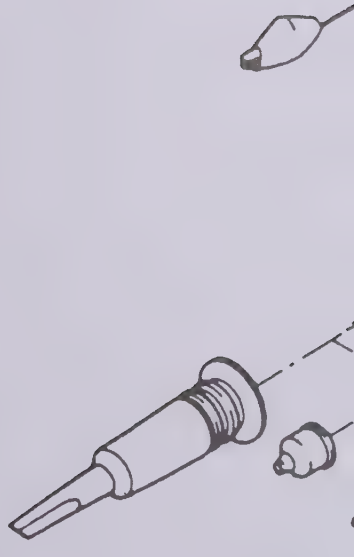

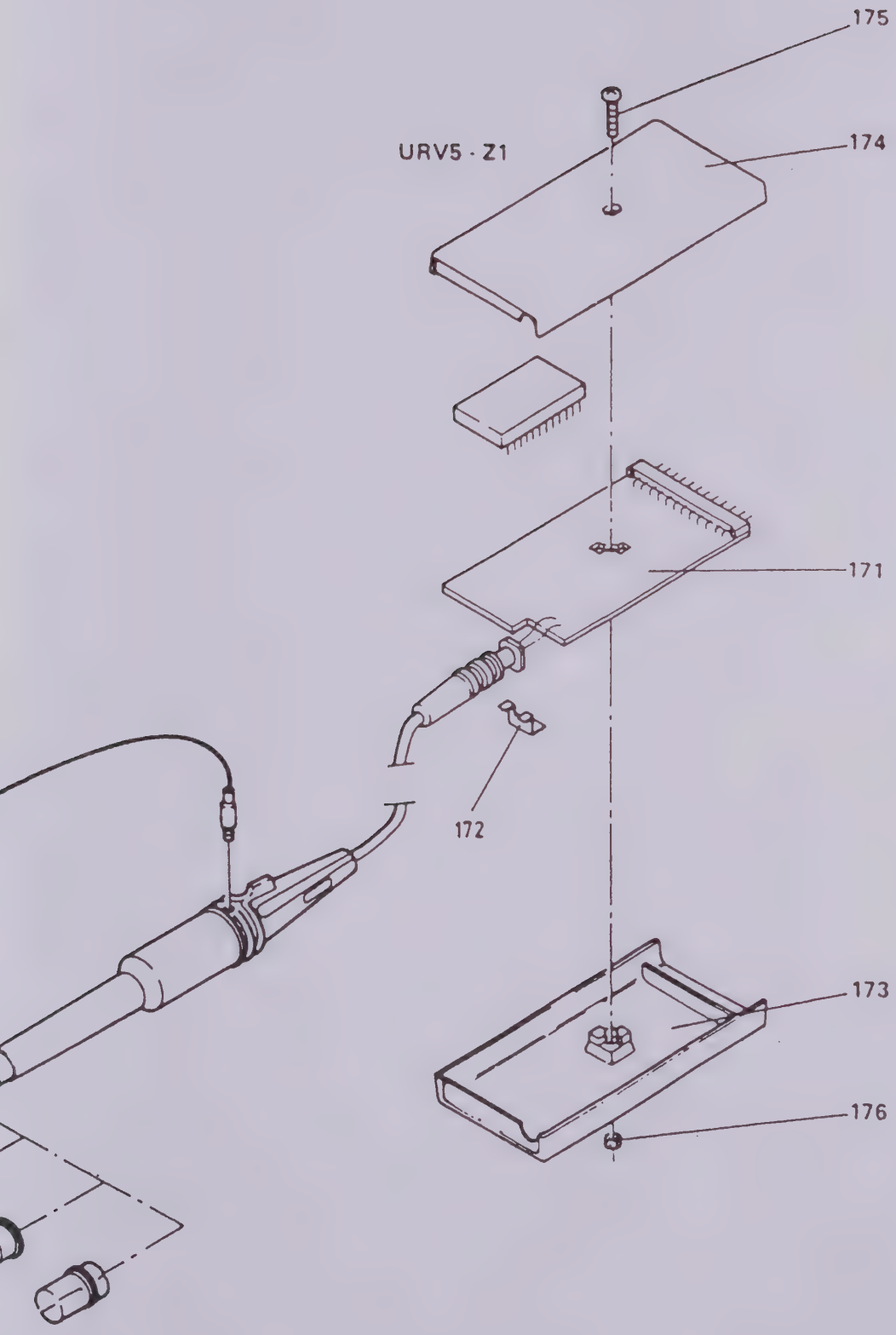

Bild 4 · 14
Fig 4 · 14

URV-Z3
URV5-Z7
URV-Z50

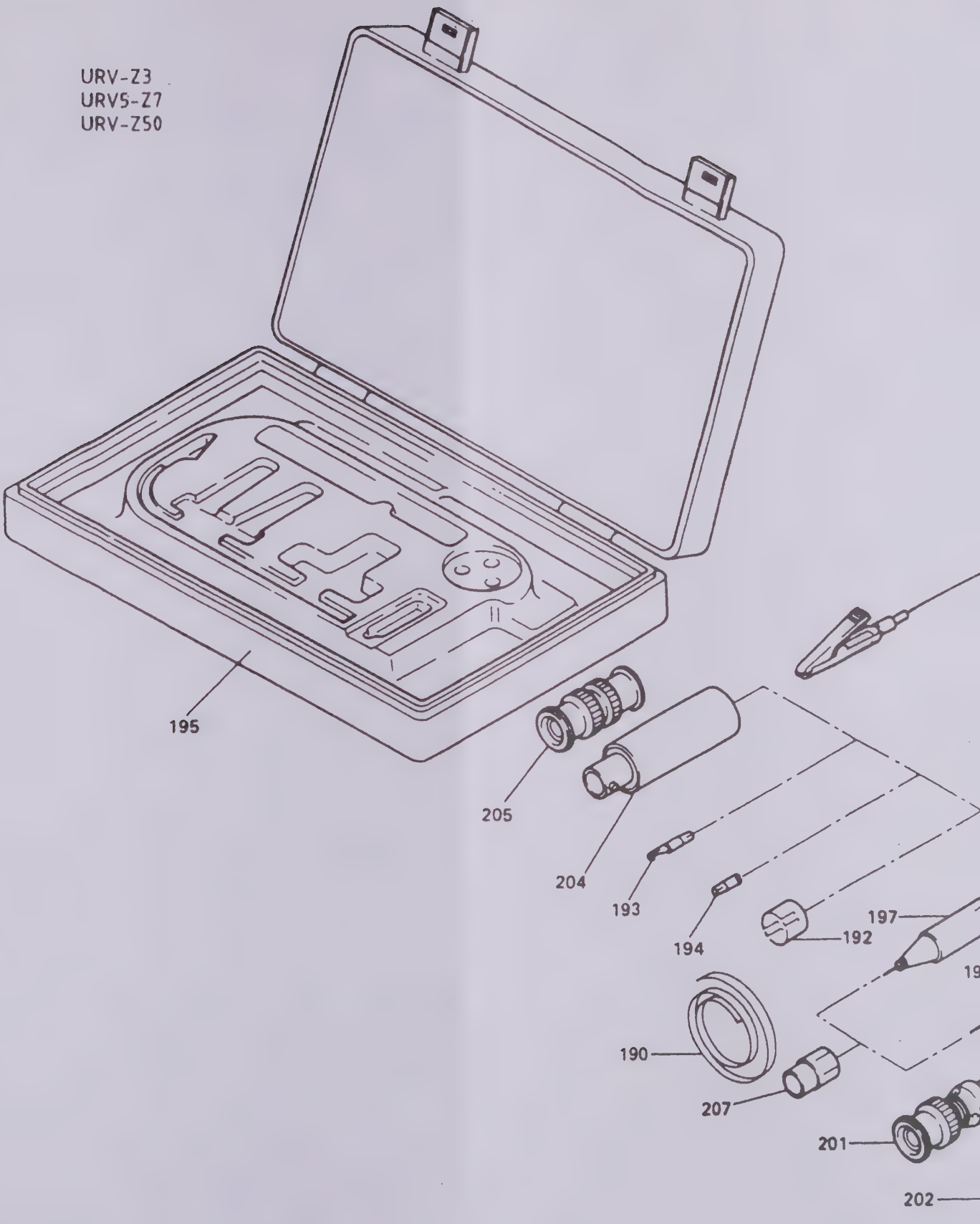

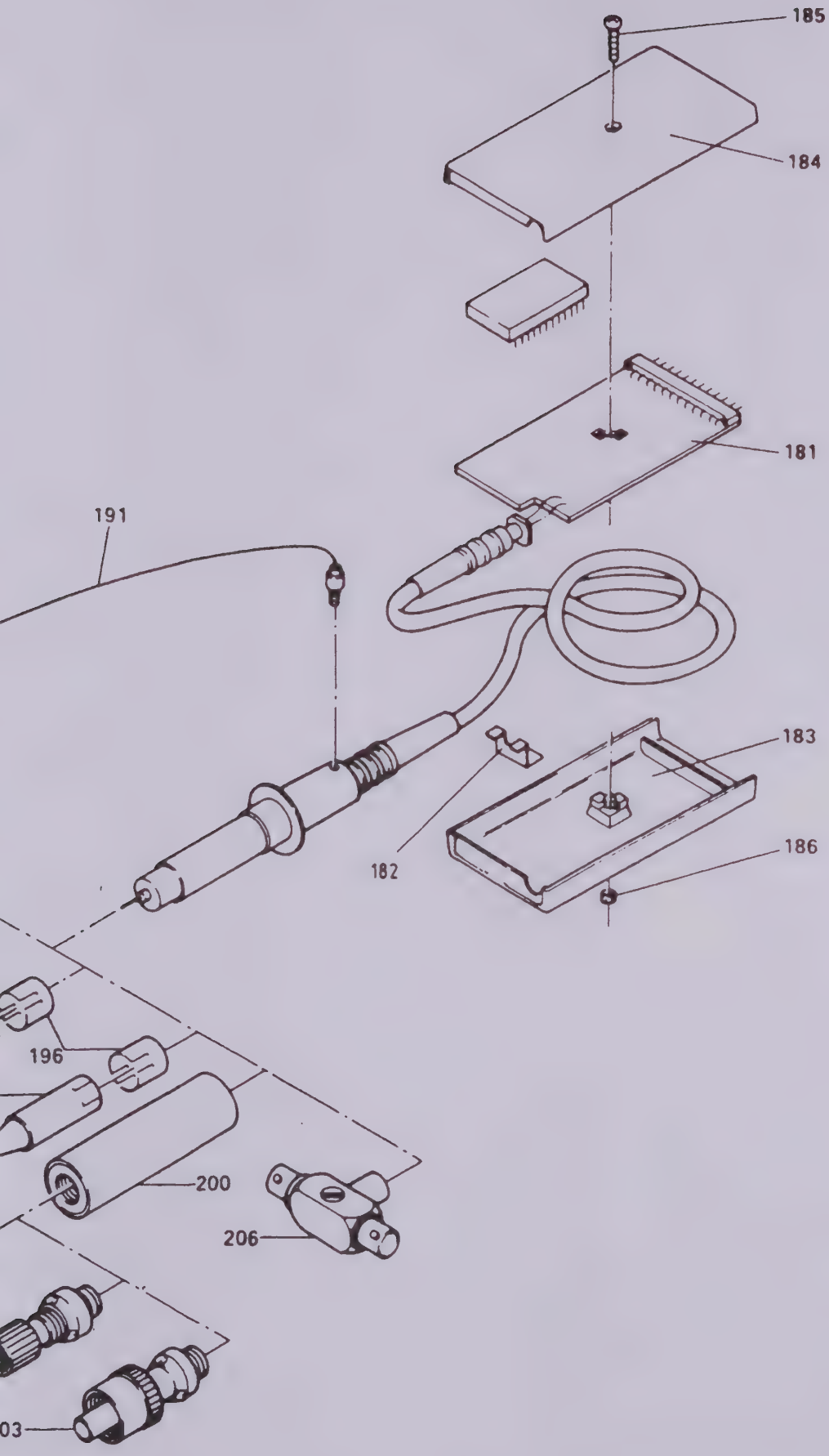

Bild 4 · 15
Fig 4 · 15

ROHDE&SCHWARZ

Schaltteillisten
numerisch geordnet
Part lists
in numerical order
Listes des pièces détachées
par numéros de référence

(R 29500 Bl. 3)
095.1000 Bl. 3

ROHDE&SCHWARZ

R&S-Schlüsselliste
R&S key list
Liste des symboles de référence R&S

Die R&S-Schaltteillisten nennen in der Spalte "Benennung/Beschreibung" die technischen Daten der Bauelemente in Kurzform. Die Art des Bauelements (z.B. Schicht-, Draht-Widerstand usw.) beschreiben die 2 Kennbuchstaben vor der "Benennung" (evtl. auch vor der "Sachnummer"), die nachfolgend erklärt werden. In Ersatzteil-Bestellungen an R&S ist stets die Angabe der vollständigen Sachnummer erforderlich.

The R&S Parts Lists give the technical data of the components in short form in the column "Benennung/Beschreibung" (designation). The type of component (e.g. depos.-carbon resistor, wire-wound resistor etc.) is indicated by 2 identification letters before the designation, possibly also before the "Sachnummer" (order number), which are explained below. When ordering spare parts from R&S, the complete order number must always be specified.

La colonne «Désignation/description» des listes de pièces de R&S indique les caractéristiques des éléments sous forme abregée. Le type d'élément (p. ex. résistance à couche, resistance bobinée etc. ...) est décrit par les deux lettres précédant la désignation (et éventuellement le numéro de référence), dont voici l'explication. Prière d'indiquer le numéro de référence («Sachnummer») complet dans toute commande de pièces de rechange.

Teile-familie	Art des Bauelementes	Parts family	Type of component	Famil-le	Type d'element
A	**Aktive Bauelemente, Halbleiter**	**A**	**Active components, semiconductors**	**A**	**Composants actifs, semiconducteurs**
AD	Universaldiode, z.B. Gleichrichter, Sperrdiode	AD	General-purpose diode, e.g. rectifier, high-resistance diode	AD	Diode d'usage général, p.ex. redresseur, diode à haute résistance
AE	Spezialdiode, z.B. Tunnel-, Kapazitäts-, Zener-Diode	AE	Diode (special), e.g. tunnel diode, varactor, Zener diode	AE	Diode spéciale, p.ex. diode tunnel, varactor, diode Zener
AF	Fotohalbleiter, z.B. Foto-Diode, -Transistor, -Widerstand, Leuchtdiode	AF	Photo-semiconductor, e.g. resistor, diode, transistor, LED	AF	Semiconducteur photoelectrique, p.ex. diode, transistor, résistance photoél., DEL
AG	Leistungs-Gleichrichter, z.B. Thyristor, Triac, Selengleichrichter	AG	Power rectifier, e.g. thyristor, triac, selenium rectifier	AG	Redresseur de puissance, p.ex. thyristor, triac, redresseur, au sélénium
AK	Kleinsignal-Transistor	AK	Small-signal transistor	AK	Transistor faible puissance
AL	Leistungs-Transistor	AL	High-power transistor	AL	Transistor grande puissance
AM	Spezial-Transistor, z.B. FET, MOSFET	AM	Transistor (special), e.g. FET, MOS-FET	AM	Transistor spécial, p.ex. TEC, MOSTEC
AP	Peltier-, Hall-Element	AP	Peltier element, Hall element	AP	Element Peltier, élement Hall
AR	Röhre für Empfänger, Verstärker, Gleichrichter	AR	Valve for receiver, amplifier, rectifier	AR	Tube pour récepteur, amplificateur, redresseur
AS	Spezialröhre, z.B. Senderöhre, EW-Widerstand, Stabilisator	AS	Valve (special), e.g. for transmitter, baretter, ballast valve	AS	Tube (special), p.ex. pour émetteur, résistance fer-hydrogene, ballast
AT	Katodenstrahlröhre, z.B. Bildröhre, Ziffern-Anzeigeröhre	AT	Cathode ray tube, e.g. picture tube, digital indicator tube	AT	Tube à rayon cathodique, p.ex. tube à image, tube à affichage numerique
AZ	Zubehör für Halbleiter u. Röhren	AZ	Accessories for semiconductors and valves	AZ	Accessoires pour semiconducteurs et tubes
B	**Bausteine**	**B**	**PC boards, chips**	**B**	**Cartes imprimées, puces**
BC	Integr. Schaltkreis (Microcomp.)	BC	Integrated circuit (interface, A/D)	BC	Circuit intégré (microprocesseur)
BD	R&S-Dünnschicht- und Dickschichtschaltung	BD	R&S thinfilm or thickfilm circuit	BD	Circuit R&S à couche mince ou épaisse
BG	R&S-spezifische Gate-Arrays	BG	R&S gate arrays	BG	Circuits intégrés prediffusés R&S
BJ	Integrierter Schaltkreis (Interface, A/D-Wandler)	BJ	Integrated circuit (interface, A/D converter)	BJ	Circuit intégré (interface, convertisseur A/N)
BL	Log. Schaltkreis z.B. DTL, TTL, HTL, ECL, C-MOS	BL	Logic circuit, e.g. DTL, TTL, HTL, ECL, C-MOS	BL	Circuit logique, p.ex. DTL, TTL, HTL, ECL, C-MOS
BM	Hybridbaustein, z.B. Mischer, Tuner, Modulator	BM	Hybrid chip, e.g. mixer, tuner, modulator	BM	Puce hybride, p.ex. mélangeur, tuner, modulateur
BO	Analogschaltkreis, z.B. Operationsverstärker	BO	Analog circuit, e.g. operational amplifier	BO	Circuit analogique, p.ex. amplificateur opérationnel
BP	Optoelektronischer Baustein, z.B. Anzeigeeinheit, Koppler	BP	Optoelectronic component, e.g. display, coupler	BP	Composant optoelectronique, p.ex. afficheur, coupleur
BS	Schalt- und Steuerbaustein, elektronischer Sensor	BS	Switching and control modul, electronic sensor	BS	Modul de commutation et de commande, sonde electronique
BV	Stromversorgung, Übersp.-Schutz	BV	Power pack, protective circuit	BV	Alimentation, protection surcharge
BZ	Zubehör	BZ	Accessories	BZ	Accessoires

Teile-familie	Art des Bauelementes	Parts family	Type of component	Famil-le	Type d'element
C	**Kondensatoren**	**C**	**Capacitors**	**C**	**Condensateurs**
CB	Bypass-, Durchf.-Kondensator	CB	Bypass capacitor, feed-through capacitor	CB	Condensateur bypass, condensateur de traversée
CC	Keramischer Kondensator	CC	Ceramic capacitor	CC	Condensateur céramique
CD	Drehkondensator	CD	Variable capacitor	CD	Condensateur variable
CE	Elektrolytkondensator	CE	Electrolytic capacitor	CE	Condensateur électrolytique
CG	Glimmerkondensator	CG	Mica capacitor	CG	Condensateur au mica
CH	Sperrschichtkondensator	CH	Semiconductor capacitor	CH	Condensateur semiconducteur
CK	Kunstfolienkondensator	CK	Synthetic-foil capacitor	CK	Condensateur à feuille synthétique
CL	Ker. Hochsp.-Kondensator	CL	HV capacitor (ceramic)	CL	Condensateur HT céramique
CM	Metallpapier-Kondensator	CM	MP capacitor	CM	Condensateur à papier métallisé
CN	Kondensatornetzwerk	CN	Capacitor network	CN	Réseau capacitif
CP	Papierkondensator	CP	Paper capacitor	CP	Condensateur au papier
CS	Störschutzkondensator	CS	Interference-suppression capacitor	CS	Condensateur anti-parasite
CT	Trimmkondensator	CT	Trimmer capacitor	CT	Condensateur ajustable
CV	Vakuum-Kondensator	CV	Vacuum capacitor	CV	Condensateur à vide
D	**Drähte, Leitungen**	**D**	**Wires, lines**	**D**	**Fils, lignes**
DD	Schalt- und Wickeldraht	DD	Hook-up or winding wire	DD	Fil de câblage, fil de bobinage
DF	Flachleitung, Litze	DF	Flat multiple line, stranded wire	DF	Ligne plate, ligne torsadee
DG	Abgeschirmte Leitung	DG	Shielded line	DG	Ligne blinde
DH	Koaxialkabel	DH	Coaxial line	DH	Ligne coaxiale
DJ	Isolierschläuche, Schrumpf-schläuche, Wellrohre, Schutzschläuche	DJ	Insulating sheaths, shrink-on sleeves, corrugated tubes, protective tubes	DJ	Gaines isolantes, gaines thermorétractables tubes ondulés, gaines protectrices
DL	HF-Litzen	DL	RF stranded wires	DL	Lignes torsadées RF
DM	Schaltlitzen (mehrdrähtige Leiter)	DM	Multi-conductor wires	DM	Lignes torsadées (multiconducteurs)
DN	Antenne	DN	Antenna	DN	Antenne
DO	Lichtleiter (optisch)	DO	Optical waveguides	DO	Guides d'onde optiques
DP	Leiterplatten (unbestückt)	DP	Printed circuit boards (bare)	DP	Cartes imprimees (non équipées)
DQ	Multilayer (unbestückt)	DQ	Multilayer boards (bare)	DQ	Cartes multicouche (non équipees)
DS	Anschlußkabel (mehradrig)	DS	Connecting cable, multicore	DS	Câble de connexion (multiconducteur)
DU	Substratplatten für Dickschicht-schaltungen	DU	Substrate boards for thickfilm circuits	DU	Cartes à substrat pour circuits a couche épaisse
DW	Festmantelkabel	DW	Rigid cables	DW	Câbles rigides
E	**Elektrische Teile**	**E**	**Electric parts**	**E**	**Organes électriques**
EB	Blei-, NC-Akku, Batterie	EB	Lead or alkaline accumulator, battery	EB	Accumulateur Pb/NC, batterie
ED	Gedruckte Schaltung (bestückte Leiterplatte), nicht steckbar	ED	Printed circuits (assembled), non-pluggable	ED	Circuits imprimés (équipés) non enfichables
EE	Gedruckte Schaltung (bestückte Leiterplatte), steckbar	EE	Printed circuits (assembled), pluggable	EE	Circuits imprimés (équipes) enfichables
EF	Glühlampe, Leuchte	EF	Incandescent lamp, pilot lamp	EF	Lampe à incandescence, voyant
EG	Glimmlampe, Entladungslampe	EG	Glow lamp, discharge lamp	EG	Lampe à luminescence lampe à décharge
EK	Kontakt-Streifen, -Feder	EK	Contact clip, contact spring	EK	Lampe de contact, ressort de contact
EL	Lautsprecher, Kopfhörer, Mikrofon	EL	Loudspeaker, headphones, microphone	EL	Haut-parleur, casque, microphone
EM	Motor, Hubmagnet, Drehfeldsystem	EM	Motor, lifting magnet, synchro system	EM	Moteur, électro-aimant de levage, systeme synchro
EO	Oszillator, z.B. Quarzoszillator	EO	Oscillator, e.g. crystal oscillator	EO	Oscillateur p.ex. oscillateur à quartz
EP	Tief-, Band-, Hochpaß, Bandsperre, Diskriminator	EP	Lowpass, bandpass, highpass filter, band-stop filter, discriminator	EP	Filtre passe-bas, passe-bande, passe-haut, suppression de bande, discriminateur
EQ	Schwing-, Filter-Quarz	EQ	Oscillator or filter crystal	EQ	Quartz oscillateur, quartz de filtre
ER	Resonator, piezoelektr./magnetostriktiv	ER	Resonator, piezoelectric/ magnetostrictive	ER	Résonateur piézo-électrique/ magneto-strictif
ES	Passive SHF-Bauteile	ES	Passive SHF-components	ES	Composant SHF passif
ET	Thermostat	ET	Thermostat	ET	Thermostat
EV	Lüfter, Gebläse	EV	Ventilator, blower	EV	Ventilateur, soufflerie

R&S-Schlüsselliste
R&S key list
Liste des symboles de référence R&S

ROHDE&SCHWARZ

Teile-familie	Art des Bauelementes	Parts family	Type of component	Famil-le	Type d'élement
F	**Fassungen, Steckverbindungen**	**F**	**Sockets, connectors**	**F**	**Douilles, connecteurs**
FG	Koax-Umrüstsatz	FG	Coaxial screw-in assembly	FG	Ensemble vissable coaxial
FH	Koax-Übergang auf Fremdsystem	FH	Coaxial adapter	FH	Adaptateur coaxial
FJ	BNC-Systemteil	FJ	BNC screw-in assembly	FJ	Ensemble vissable BNC
FK	Koaxial-UHF-Systemteil	FK	Coaxial UHF screw-in assembly	FK	Ensemble vissable coaxial UHF
FM	Mehrfachstecker, Buchsenleiste	FM	Multipoint connector	FM	Connecteur multiple
FN	Netz-Steckverbindung	FN	AC-supply connector	FN	Connecteur secteur
FO	Runde Mehrfach-Steckverbindung	FO	Round multipoint connector	FO	Connecteur multipoles rond
FP	Druckschalt-Steckverbindung	FP	Multipoint connector for PC boards	FP	Connecteur multipoles pour cartes imprimées
FR	Fassung für Lampe, Sicherung, usw.	FR	Socket for lamp, fuse, etc.	FR	Douille pour lampe, fusible etc. . . .
FT	Schwachstrom-Steckverbindung	FT	LV plug and socket	FT	Connecteur pour faible courant
FU	Hochspannungs-Steckverbindung	FU	HV plug and socket	FU	Connecteur pour haute tension
FV	Verbinder (z.B. AMP)	FV	Push-on connector	FV	Connecteur à enfichage
FZ	Zubehör für koax. Bauelemente	FZ	Accessories for coax. components	FZ	Accessoires pour composants coax.
H	**Software**	**H**	**Software**	**H**	**Logiciel**
HP	Software-Komponenten und Software-Module	HP	Rights to software components and software modules	HP	Droits d'utilisation de composants et modules logiciel
HS	Auf Informationsträger geladene Software	HS	Software data media	HS	Logiciel sur support d'information
J	**Meßinstrumente**	**J**	**Indicators**	**J**	**Indicateurs**
JD	Drehspul-Anzeigeinstrument	JD	Moving-coil meter	JD	Galvanomètre à cadre mobile
JE	Dreheisen-Anzeigeinstrument	JE	Moving-iron meter	JE	Galvanomètre à fer mobile
JF	Frequenzmesser	JF	Frequency meter	JF	Fréquencemètre
JG	Drehspulinstrument mit Gleichrichter	JG	Moving-coil meter with rectifier	JG	Galvanomètre à cadre mobile avec redresseur
JH	Betriebsstundenzähler	JH	Operating-hours counter	JH	Compteur d'heures de fonctionnement
JJ	Impulszähler	JJ	Pulse counter	JJ	Compteur d'impulsions
JK	Kleinst-Instrument, z.B. Abstimmanzeiger	JK	Mini-instrument, e.g. tuning indicator	JK	Petit indicateur, p.ex. indicateur d'accord
JM	Mechanisches Zählwerk	JM	Mechanical counter	JM	Compteur mécanique
JP	Projektions-Instrument (Leuchtziffer)	JP	Digital display	JP	Afficheur numérique
JQ	Quotientenmesser (Kreuzspulinstrum.)	JQ	Ratiometer (cross coul)	JQ	Quotientmètre (à cadres croisés)
JU	Uhrwerk	JU	Clockwork	JU	Mouvement d'horlogerie
JW	Elektrodyn. Anzeigeinstrument	JW	Electrodynamic meter	JW	Instrument électrodynamique
L	**Induktivitäten, Magnetik**	**L**	**Inductors, magnetic components**	**L**	**Composants inductifs et magnétiques**
LB	Blech- und Schnittbandkern mit Zubehör	LB	Laminated and C-cores with accessories	LB	Noyaux feuilletés et noyaux de type C, avec accessoires
LC	Keramische Spule	LC	Ceramic coil	LC	Bobine céramique
LD	Netz-, HF-Drossel, Df-Filter	LD	Choke, lead-through filter	LD	Self de choc, filtre de traversee
LE	Einzelkreis, Bandfilter	LE	Single tuned circuit, bandpass filter	LE	Circuit accordé, filtre passe-bande
LF	Ferritkern mit Zubehör	LF	Ferrite cores with accessories	LF	Noyaux en ferrite avec accessoires
LK	Karbonyleisenkern und elektrischer Kupferkern mit Zubehör	LK	Iron carbonyl slugs and copper slugs with accessories	LK	Noyaux en fer carbonyle et en cuivre, avec accessoires
LL	Luftspule	LL	Air-core coils	LL	Bobines à air
LM	Magnetband und -platte	LM	Magnetic tapes and disks	LM	Bandes et disques magnétiques
LS	Schirmbecher	LS	Screening cans	LS	Boîtiers de blindage
LT	Netztransformator	LT	Power transformer	LT	Transformateur secteur
LU	NF-Übertrager	LU	AF transformer	LU	Transformateur BF
LV	Variometer	LV	Variometer	LV	Variometre
LW	Wickelkörper, allgemein	LW	Coil formers, general	LW	Carcasses de bobine, en general

Teile-familie	Art des Bauelementes	Parts family	Type of component	Famil-le	Type d'element
R	**Widerstände**	**R**	**Resistors**	**R**	**Résistances**
RD	Drahtwiderstand	RD	Wire-wound resistor	RD	Résistance bobinée
RF	Kohleschicht-Widerstand	RF	Carbon-film resistor	RF	Résistance à couche de carbone
RG	Metallglasur-Widerstand	RG	Metal-coated resistor	RG	Résistance à couche métallique
RJ	Metalloxyd-Widerstand	RJ	Metal-oxide resistor	RJ	Résistance à oxyde métallique
RK	Kaltleiter, Heißleiter, Varistor	RK	PTC, NTC resistors, varistors	RK	Résistances CPT, CNT, varistors
RL	Metallfilm-Widerstand	RL	Metal-film resistor	RL	Résistance à film métallique
RN	Widerstandsnetzwerk	RN	Resistor network	RN	Réseau de résistance
RR	Draht-Potentiometer	RR	Wire-wound potentiometer	RR	Potentiomètre bobiné
RS	Schicht-Potentiometer	RS	Carbon-film potentiometer	RS	Potentiomètre à couche
RT	Dämpfungsglied, Abschlußwiderstand	RT	Attenuator, termination	RT	Atténuateur, charge
RV	Drahtwiderstand mit Abgriff	RV	Wire-wound resistor, tapped	RV	Résistance bobinée à prise
RW	Wendelpotentiometer	RW	Helical potentiometer	RW	Potentiomètre hélicoidal
S	**Schalter, Relais, Sicherungen**	**S**	**Switches, relays, fuses**	**S**	**Commutateurs, relais, fusibles**
SB	Drucktastenschalter	SB	Pushbutton switch	SB	Commutateur à touche
SD	Drehschalter	SD	Rotary switch	SD	Commutateur rotatif
SF	Kontaktfedersatz	SF	Spring contact assembly	SF	Jeu de ressorts de contact
SH	HF-Koaxialschalter, -Relais, -Teiler	SH	Coaxial RF switch, RF relay, RF attenuator	SH	Commutateur RF coaxial, relais RF, atténuateur RF
SK	Kipp-, Wipp- und Schiebeschalter	SK	Toggle switch, slide switch	SK	Commutateur à bascule, à glissière
SL	Leistungsschalter Netz/HF	SL	AC supply switch, high-power RF switch	SL	Commutateur secteur, de puissance RF
SM	Mikroschalter	SM	Microswitch	SM	Microrupteur
SN	Elektromagnet, Relais	SN	Electromagnetic relay	SN	Relais électromagnétique
SP	Leistungsrelais, Luftschütz	SP	Power relay, air-type contactor	SP	Relais de puissance, contacteur à air
SR	Reedrelais	SR	Reed relay	SR	Relais reed
SS	Sicherung, Schutzschalter	SS	Fuse, automatic cut-out	SS	Fusible, coupe-circuit automatique
ST	Thermoschalter	ST	Thermal circuit breaker	ST	Disjoncteur thermique
SU	Überspannungs-Ableiter	SU	Arrester	SU	Eclateur
SW	Wechselrichter, Näherungsschalter	SW	Inverter (DC-AC), proximity switch	SW	Inverseur (DC-AC), commutateur de proximité
SZ	Zeitschalter	SZ	Time switch	SZ	Interrupteur horaire
V	**Verbindungselemente**	**V**	**Connecting elements**	**V**	**Eléments de raccordement**
VK	Klemme, Klemmleiste	VK	Clamp, terminal strip	VK	Pince, réglette à bornes
VL	Lötöse, Stützpunkt	VL	Soldering lug	VL	Cosse à souder
VS	Schraube, Mutter, Scheibe	VS	Screw, nut, washer	VS	Vis, écrou, disque

Farbcode für Widerstände und Kondensatoren

Anmerkung:
Die Wertangabe der weitgehend miniaturisierten Bauelemente erfolgt überwiegend durch Farbkennzeichnungen, deren Bedeutung der nachfolgenden Tabelle entnommen werden kann.

Hinweis:
Im Zuge des technischen Fortschrittes setzt R&S zunehmend Metallschichtwiderstände mit 1% Toleranz anstelle von Kohleschichtwiderständen mit 5% Toleranz ein. Metallschichtwiderstände können sich dabei an Stellen befinden, an denen gemäß Schaltteilliste Kohleschichtwiderstände vorgesehen sind. Etwaige geringfügige Differenzen der Nennwerte zwischen Stromlaufplan, Schaltteilliste und Gerät liegen im zulässigen Toleranzbereich.

Colour code for resistors and capacitors

Note:
The electrical values of the largely miniaturized components are mainly identified by a colour code, the meaning of which can be taken from the table below.

N. B.:
Following the state of the art R&S makes increasing use of metal-film resistors (1% tolerance) instead of carbon-film resistors (5% tolerance). Metal-film resistors may have been employed where carbon-film resistors are specified in the parts list. Any slight differences of nominal values between circuit diagram, parts list and equipment are within tolerance.

Code couleur pour résistances et condensateurs

Remarque:
Les valeurs électriques des composants fort miniaturisés sont indiquées dans la plupart des cas par un code couleur dont voici l'explication.

N. B.:
Suivant le progrès technique R&S utilise de plus en plus des résistances à film métallique (tolérance 1%) au lieu des résistances à couche de carbone (tolérance 5%). Des résistances à film métallique peuvent se trouver en des points où des types à couche de carbone figurent dans la liste des composants. Les différences minimes des valeurs nominales existant éventuellement entre le schema de circuit, la liste des composants et l'appareil sont dans la marge de tolérance.

Farbe/Colour/Couleur	A	B	C	D
Schwarz/Black/Noir	—	0		
Braun/Brown/Marron	1	1	0	± 1%
Rot/Red/Rouge	2	2	00	± 2%
Orange/Orangé	3	3	000	
Gelb/Yellow/Jaune	4	4	0000	
Grün/Green/Vert	5	5	00000	± 0.5%
Blau/Blue/Bleu	6	6	000000	
Violett/Violet	7	7	—	± 0.1%
Grau/Gray/Gris	8	8	—	
Weiß/White/Blanc	9	9	—	
Gold/Dore	—	—	—	± 5%
Silber/Silver/Argente	—	—	—	± 10%
Ohne Farbe/No colour/ Pas de couleur	—	—	—	± 20%

Anordnungsbeispiele für / Examples for / Exemple pour

Widerstände (R) / Resistors (R) / Resistance (R) — Kondensat. (C) / Capacitors (C) / Condensateur (C)

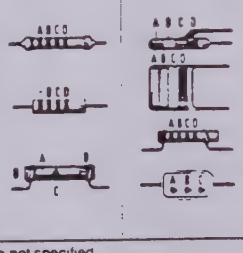

1) Toleranzring, hier nicht spezifiziert.

1) Tolerance ring, here not specified

1) Anneau de tolérance, ne pas specifié ici.

Definition* / Définition *

Kennzeichen A (Bauteilfarbe 1. Farbring) = 1. Zahl
Kennzeichen B (Bauteilende 2. Farbring) = 2. Zahl
Kennzeichen C (Punkt/3. Farbring) = 3. Zahl = Zahl der Nullen
Kennzeichen D (Punkt/4. Farbring) = Toleranz des Nennwerts in %
(Fehlendes Kennzeichen für D bedeutet ±20%)

Das Fehlen eines Kennzeichens bedeutet, daß die Farbe des Bauteilkörpers die Wertangabe darstellt.

Marking A (body colour or first coloured ring) 1st digit
Marking B (body end or second coloured ring) 2nd digit
Marking C (dot or third coloured ring) number of zeroes
Marking D (dot or fourth coloured ring) tolerance on nominal value in %
(with no D marking tolerance ± 20%)

The absence of a marking signifies that the body colour gives the corresponding information.

Reperage A (couleur du corps ou 1er anneau) = 1er chiffre
Reperage B (bout du corps ou 2e anneau) = 2e chiffre
Reperage C (point ou 3e anneau) = nombre de zeros
Reperage D (point ou 4e anneau) = tolerance en % de la valeur nominale
(L'absence du reperage D signifie ± 20%)

L'absence de tout reperage signifie que la couleur du corps du composant represente la valeur correspondante

* Siehe auch DIN 41 429 und DIN 40 825

* see also IEC publication 62-1962 and 62-1968

* Voir aussi DIN 41 429 et DIN 40 825

Zusammenstellung der lieferbaren Netzkabel
List of power cables available
Liste des câbles d'alimentation disponibles

Sach-Nr. Stock No. Référence	Schutzkontaktstecker nach: Earthed-contact connector: Fiche à contact de protection:	Vorzugsweise verwendet in: Preferably used in: Utilisé de préférence en:
DS 006.7013	BS 1363: 1967' 13A entspr. IEC 83: 1975 Standard B2 BS 1363: 1967' 13A complying with IEC 83: 1975 Standard B2 BS 1363: 1967' 13A suivant CEI 83: 1975 norme B2	GB Great Britain Grande-Bretagne
DS 006.7020	Typ 12 nach SEV-Vorschrift 1011.1059, Normblatt S24507 Type 12 complying with SEV regulation 1011.1059, standard sheet S24507 Type 12 suivant la norme SEV 1011.1059, feuille S24507	Schweiz Switzerland Suisse
DS 006.7036	Typ 498/13 nach USA-Vorschrift UL 498, bzw. IEC 83 Type 498/13 complying with US regulation UL 498 or with IEC 83 Type 498/13 suivant la norme E.U.A UL 498 ou la norme CEI 83	USA/Kanada USA/Canada E.U.A./Canada
DS 006.7107	Typ SAA3 10 A, 250 V, nach AS C112-1964 Ap. Type SAA3 10 A, 250 V, complying with AS C112-1964 Ap. Type SAA3 10 A, 250 V, suivant AS C112-1964 Ap.	Australien Australia Australie
DS 025.2365	DIN 49441, 10 A, 250 V	Europa (ohne Schweiz) Europe (Switzerland not included) Europe (Suisse non comprise)

Kennz. Comp. No.	Benennung Designation	Sachnummer Stock No.	Hersteller Manufacturer	Bezeichnung Designation	enthalten in contained in
.	XX VARIANTENERKLAERUNG IDENTIFICATION OF MODELS VAR 02 = GRUNDAUSFUEHRUNG MOD 02 = BASIC MODEL				
..	XX ZUGEH.STROML. CIRC.DIAGR. 349.1910 S				
B1	EQ 6,000 MHZ CL30PF HC43U CRYSTAL 6,000MHZ NICHT BESTUECKT/NOT IN PCB	EQ 0302.7186.00	ITT-SEMICO	N. R&S SACHNUMMER	
C1	CK 100NF+-5%63VRD2,5H7MKT CAPACITOR	CK 0099.2930.00	ROEDERSTEI	MKT 1826-410-06-4W	
C2	CK 100NF+-5%63VRD2,5H7MKT CAPACITOR	CK 0099.2930.00	ROEDERSTEI	MKT 1826-410-06-4W	
C3	CK 100NF+-5%63VRD2,5H7MKT CAPACITOR	CK 0099.2930.00	ROEDERSTEI	MKT 1826-410-06-4W	
C4	CK 100NF+-5%63VRD2,5H7MKT CAPACITOR	CK 0099.2930.00	ROEDERSTEI	MKT 1826-410-06-4W	
C6	CK 100NF+-5%63VRD2,5H7MKT CAPACITOR	CK 0099.2930.00	ROEDERSTEI	MKT 1826-410-06-4W	
C7	CK 100NF+-5%63VRD2,5H7MKT CAPACITOR	CK 0099.2930.00	ROEDERSTEI	MKT 1826-410-06-4W	
C9	CK 330NF+-5%63VRD4,5H10 CAPACITOR	CK 0099.2969.00	ROEDERSTEI	MKT 1826-433-06-4	
C10	CK 100NF+-5%63VRD2,5H7MKT CAPACITOR	CK 0099.2930.00	ROEDERSTEI	MKT 1826-410-06-4W	
C11	CK 100NF+-5%63VRD2,5H7MKT CAPACITOR	CK 0099.2930.00	ROEDERSTEI	MKT 1826-410-06-4W	
C12	CE 4,7UF+-20%63V RD9XH13 ELECTROLYTIC CAPACITOR	0008.7491.00	PHILIPS_CO	2222 036 90381	
C13	CK 100NF+-5%63VRD2,5H7MKT CAPACITOR	CK 0099.2930.00	ROEDERSTEI	MKT 1826-410-06-4W	
C14	CK 470NF+-5%63V RD5H10MKT CAPACITOR	CK 0099.2975.00	ROEDERSTEI	MKT 1826-447-06-4	
C15	CK 1UF+-5%50V7,5X5,5X10,5 CAPACITOR	CK 0099.2998.00	ERO	MKT 1826-510/054-R	
C16 ..21	CE 1000UF-10+50%25V18X30 ELECTROLYTIC CAPACITOR	0302.0352.00	FROLYT	EKM 00 JG 410E 00G	
C22	CE 100UF+-20%35V RM5 ELECTROLYTIC CAPACITOR	0008.7510.00	PHILIPS_CO	2222 116 90042	
C23	CK 470NF+-5%63V RD5H10MKT CAPACITOR	CK 0099.2975.00	ROEDERSTEI	MKT 1826-447-06-4	
C24	CE 470UF+-20%50V RM5 ELECTROLYTIC CAPACITOR	CE 0008.7504.00	PANASONIC	ECA 1 HFG 471 B	
C25	CE 470UF+-20%50V RM5 ELECTROLYTIC CAPACITOR	CE 0008.7504.00	PANASONIC	ECA 1 HFG 471 B	
C26	CE 470UF+-20%50V RM5 ELECTROLYTIC CAPACITOR	CE 0008.7504.00	PANASONIC	ECA 1 HFG 471 B	
C27	CE 470UF+-20%50V RM5 ELECTROLYTIC CAPACITOR	CE 0008.7504.00	PANASONIC	ECA 1 HFG 471 B	
C28	CE 22UF+-20%63V RM5 ELECTROLYTIC CAPACITOR	0008.7433.00	PHILIPS_CO	2222 116 90111	
C29	CE 22UF+-20%63V RM5 ELECTROLYTIC CAPACITOR	0008.7433.00	PHILIPS_CO	2222 116 90111	
C30	CE 22UF+-20%63V RM5 ELECTROLYTIC CAPACITOR	0008.7433.00	PHILIPS_CO	2222 116 90111	
C31	CK 100NF+-5%63VRD2,5H7MKT CAPACITOR	CK 0099.2930.00	ROEDERSTEI	MKT 1826-410-06-4W	
C35	CC 22PF+-2%4X5NP0 CAPACITOR	CC 0087.6464.00	PHILIPS_CO	2222 678	
C36	CK 330NF+-5%63VRD4,5H10 CAPACITOR	CK 0099.2969.00	ROEDERSTEI	MKT 1826-433-06-4	
C37	CC 47PF+-2%5X6NP0 CAPACITOR	CC 0087.6506.00	PHILIPS_CO	2222 678	
C39	CC 100PF+-2%6X9NP0 CAPACITOR	CC 0087.6541.00	PHILIPS_CO	2222 678	
C40 ..47	CC 220PF+-2%6X7N750 CAPACITOR	CC 0087.6941.00	PHILIPS_CO	2222 678 58221	
C50	CC 8,2PF+-0,25PF3X4NP0 CAPACITOR	CC 0087.6412.00	VALVO	2222 678	
C51	CC 8,2PF+-0,25PF3X4NP0 CAPACITOR NICHT BESTUECKT/NOT IN PCB	CC 0087.6412.00	VALVO	2222 678	
C52	CK 100NF+-5%63VRD2,5H7MKT CAPACITOR	CK 0099.2930.00	ROEDERSTEI	MKT 1826-410-06-4W	

Für diese Unterlage behalten wir uns alle Rechte vor.

Kennz. Comp. No.	Benennung Designation	Sachnummer Stock No.	Hersteller Manufacturer	Bezeichnung Designation	enthalten in contained in
D1	BC P8085A 8B.CPU CPU	0335.8930.00	INTEL	P8085AH	
D2	BL SN74LS273N 8BIT-D-REG. 8BIT-D-REGISTER	0214.8998.00	TEXAS	SN74LS273N	
D3	BL SN74LS373N 8BIT-D-REG. BL SN74LS373N 8BIT-D-REG.	0336.7543.00	TEXAS	SN74LS373N	
D4	BC P8279-5 KEYB.DISP.IF INTERF.CIRCUIT KEYB.DISP.	0334.2496.00	INTEL	P8279-5	
D5	SOFTWARE N.BESTUECKUNGSPL	0349.2022.90			
D6	SOFTWARE N.BESTUECKUNGSPL	0349.2039.90			
D8	BC AT28C16-25PI EEPROM IC MEMORY	0008.9565.00	ATMEL	AT28C16-25PI	
D11	BC P8291A IEC BUS IF IEC BUS INTERFACE	0099.4978.00	INTEL	P8291A	
D12 ..15	BJ MC3448AP 4XBUS TRANSC BUS-TRANSCEIVER	0300.6247.00	MOTOROLA	MC 3448 AP	
D16	BL SN7416N HEXINV.O/C 15V IC INVERTER SN7416N	0412.8440.00	TEXAS	SN7416N	
D17	BL SN7416N HEXINV.O/C 15V IC INVERTER SN7416N	0412.8440.00	TEXAS	SN7416N	
D18	BL SN74LSO2N 4/2INP.NOR IC NOR GATE SN74LSO2N	0266.4658.00	TEXAS	SN74LSO2N	
D20	BL CD4047BE MULTIVIBR. MULTIVIBRATOR	0349.2980.00	RCA	CD4047BE	
D21	BL SN74LS221N 2XMONOFLOP IC MONOFLOP SN74LS221N	0266.9520.00	TEXAS	SN74LS221N	
D22	BL CD4040BE 12B.COUNTER COUNTER	0086.7180.00	RCA	CD4040BE	
D23	BL SN74LSOON 4/2INP.NAND IC NAND GATE SN74LSOON	0266.4641.00	TEXAS	SN74LSOON	
D25	BL SN74LS138N DEMUX 1:8 DEMULTIPLEXER 1:8	0510.1379.00	TEXAS	SN74LS138N	
D27	BL SN74LSO3N 4/2INP.NAND IC NAND GATE SN74LSO3N	0266.2032.00	TEXAS	SN74LSO3N	
D30	BL SN74LS153N DATENSELEKT IC MULTIPLEXER SN74LS153N	0266.4729.00	TEXAS	SN74LS153N	
D31	BL SN74LS20N 2/4INP.NAND IC NAND GATE SN74LS20N	0266.2055.00	TEXAS	SN74LS20N	
D32	BC HM6264LP10 8KX8 SRAM SRAM	0813.9738.00	HYUNDAI	HY6264ALP-10	
D33	BL SN74LSO8N 4/2INP.AND IC AND GATE SN74LSO8N NICHT BESTUECKT/NOT IN PCB	0266.4664.00	TEXAS	SN74LSO8N	
D34	EO 6,000000MHZ-QU.OSZ. 5V CLOCK OSZILLATOR	0053.7945.00	TELEQUARZ	MCO 1500 B	
N2	BO SG340K + 5V1AO VREGL VOLTAGE REGULATOR	0082.0797.00	NSC	LM340K5.0	
N3	BO UA7815UC+15V1AO VREGL VOLTAGE REGULATOR	BO 0282.5403.00	NSC	LM-7815CT(LM340T15)	
N4	BO UA7915UC-15V1AO VREGL VOLTAGE REGULATOR	BO 0282.5432.00	NSC	LM7915CT	
R1	RL 0,60W 475 OHM+-1%TK50 RESISTOR	RL 0083.0390.00	RESISTA	MK2	
R2	RL 0,60W 392 OHM+-1%TK50 RESISTOR	RL 0082.2183.00	RESISTA	MK2	
R3	RL 0,60W 100 OHM+-1%TK50 RESISTOR	RL 0082.6543.00	RESISTA	MK2	
R4	RL 0,60W 1KOHM+-1%TK50 RESISTOR	RL 0082.2160.00	RESISTA	MK2	
R5	RL 0,60W 1KOHM+-1%TK50 RESISTOR	RL 0082.2160.00	RESISTA	MK2	
R6	RL 0,60W 1KOHM+-1%TK50 RESISTOR	RL 0082.2160.00	RESISTA	MK2	
R7	RL 0,60W 1KOHM+-1%TK50 RESISTOR	RL 0082.2160.00	RESISTA	MK2	
R8	RL 0,60W 475 OHM+-1%TK50 RESISTOR	RL 0083.0390.00	RESISTA	MK2	
R9	RL 0,60W 47,5KOHM+-1%TK50 RESISTOR	RL 0083.1800.00	RESISTA	MK2	
R10	RL 0,60W 100 OHM+-1%TK50 RESISTOR	RL 0082.6543.00	RESISTA	MK2	
R11	RL 0,60W 100 OHM+-1%TK50 RESISTOR	RL 0082.6543.00	RESISTA	MK2	
R12	RL 0,60W 47,5KOHM+-1%TK50 RESISTOR	RL 0083.1800.00	RESISTA	MK2	

Für diese Unterlage behalten wir uns alle Rechte vor.

Kennz. Comp. No.	Benennung Designation	Sachnummer Stock No.	Hersteller Manufacturer	Bezeichnung Designation	enthalten in contained in
R13	RL 0,60W 392 OHM+-1%TK50 RESISTOR	RL 0082.2183.00	RESISTA	MK2	
R14	RL 0,60W 475 OHM+-1%TK50 RESISTOR	RL 0083.0390.00	RESISTA	MK2	
R15	RL 0,60W 392 OHM+-1%TK50 RESISTOR	RL 0082.2183.00	RESISTA	MK2	
R18	RL 0,60W 100 OHM+-1%TK50 RESISTOR	RL 0082.6543.00	RESISTA	MK2	
R19	RL 0,60W 47,5KOHM+-1%TK50 RESISTOR	RL 0083.1800.00	RESISTA	MK2	
R20	RL 0,60W 392 OHM+-1%TK50 RESISTOR	RL 0082.2183.00	RESISTA	MK2	
R21	RL 0,60W 475 OHM+-1%TK50 RESISTOR	RL 0083.0390.00	RESISTA	MK2	
R22	RL 0,60W 100 OHM+-1%TK50 RESISTOR	RL 0082.6543.00	RESISTA	MK2	
R23	RL 0,60W 47,5KOHM+-1%TK50 RESISTOR	RL 0083.1800.00	RESISTA	MK2	
R24	RL 0,60W 392 OHM+-1%TK50 RESISTOR	RL 0082.2183.00	RESISTA	MK2	
R25	RL 0,60W 475 OHM+-1%TK50 RESISTOR	RL 0083.0390.00	RESISTA	MK2	
R26	RL 0,60W 100 OHM+-1%TK50 RESISTOR	RL 0082.6543.00	RESISTA	MK2	
R27	RL 0,60W 47,5KOHM+-1%TK50 RESISTOR	RL 0083.1800.00	RESISTA	MK2	
R28	RL 0,60W 392 OHM+-1%TK50 RESISTOR	RL 0082.2183.00	RESISTA	MK2	
R29	RL 0,60W 475 OHM+-1%TK50 RESISTOR	RL 0083.0390.00	RESISTA	MK2	
R30	RL 0,60W 100 OHM+-1%TK50 RESISTOR	RL 0082.6543.00	RESISTA	MK2	
R31	RL 0,60W 47,5KOHM+-1%TK50 RESISTOR	RL 0083.1800.00	RESISTA	MK2	
R32	RL 0,60W 392 OHM+-1%TK50 RESISTOR	RL 0082.2183.00	RESISTA	MK2	
R33	RL 0,60W 475 OHM+-1%TK50 RESISTOR	RL 0083.0390.00	RESISTA	MK2	
R34	RL 0,60W 100 OHM+-1%TK50 RESISTOR	RL 0082.6543.00	RESISTA	MK2	
R35	RL 0,60W 47,5KOHM+-1%TK50 RESISTOR	RL 0083.1800.00	RESISTA	MK2	
R36	RL 0,60W 392 OHM+-1%TK50 RESISTOR	RL 0082.2183.00	RESISTA	MK2	
R37	RL 0,60W 475 OHM+-1%TK50 RESISTOR	RL 0083.0390.00	RESISTA	MK2	
R38	RL 0,60W 100 OHM+-1%TK50 RESISTOR	RL 0082.6543.00	RESISTA	MK2	
R39	RL 0,60W 47,5KOHM+-1%TK50 RESISTOR	RL 0083.1800.00	RESISTA	MK2	
R40	RL 0,60W 392 OHM+-1%TK50 RESISTOR	RL 0082.2183.00	RESISTA	MK2	
R41	RL 0,60W 475 OHM+-1%TK50 RESISTOR	RL 0083.0390.00	RESISTA	MK2	
R44	RL 0,60W 10,0KOHM+-1%TK50 RESISTOR	RL 0083.1297.00	RESISTA	MK2	
R45	RL 0,60W 10,0KOHM+-1%TK50 RESISTOR	RL 0083.1297.00	RESISTA	MK2	
R46	RL 0,60W 45,3KOHM+-1%TK50 RESISTOR	RL 0082.2225.00	RESISTA	MK2	
R47	RL 0,60W 4,75KOHM+-1%TK50 RESISTOR	RL 0083.1097.00	RESISTA	MK2	
R48	RL 0,60W 4,75KOHM+-1%TK50 RESISTOR	RL 0083.1097.00	RESISTA	MK2	
R49	RL 0,60W 10,0KOHM+-1%TK50 RESISTOR	RL 0083.1297.00	RESISTA	MK2	
R57	RL 0,60W 4,75KOHM+-1%TK50 RESISTOR	RL 0083.1097.00	RESISTA	MK2	
R60	RL 0,60W 4,75KOHM+-1%TK50 RESISTOR	RL 0083.1097.00	RESISTA	MK2	
R61	RL 0,60W 1KOHM+-1%TK50 RESISTOR	RL 0082.2160.00	RESISTA	MK2	
R62	RL 0,60W 2,21KOHM+-1%TK50 RESISTOR	RL 0082.2477.00	RESISTA	MK2	
R63	RL 0,60W 475 OHM+-1%TK50 RESISTOR	RL 0083.0390.00	RESISTA	MK2	
R64	RL 0,60W 1,50KOHM+-1%TK50 RESISTOR	RL 0083.0732.00	RESISTA	MK2	

Für diese Unterlage behalten wir uns alle Rechte vor.

Kennz. Comp. No.	Benennung Designation	Sachnummer Stock No.	Hersteller Manufacturer	Bezeichnung Designation	enthalten in contained in
R65	RL 0,60W 100KOHM+-1%TK50 RESISTOR	RL 0082.1764.00	RESISTA	MK2	
R66	RL 0,60W 10,0KOHM+-1%TK50 RESISTOR	RL 0083.1297.00	RESISTA	MK2	
R67	RL 0,60W15 OHM+-1%TK50 RESISTOR	RL 0082.9020.00	RESISTA	MK2	
R68	RL 0,60W15 OHM+-1%TK50 RESISTOR	RL 0082.9020.00	RESISTA	MK2	
R76	RL 0,60W 100KOHM+-1%TK50 RESISTOR	RL 0082.1764.00	RESISTA	MK2	
R77	RL 0,60W 10,0KOHM+-1%TK50 RESISTOR	RL 0083.1297.00	RESISTA	MK2	
R79	RL 0,60W 47,5KOHM+-1%TK50 RESISTOR	RL 0083.1800.00	RESISTA	MK2	
R81	RL 0,60W 51,1KOHM+-1%TK50 RESISTOR	RL 0083.1822.00	RESISTA	MK2	
R82	RL 0,60W 4,75KOHM+-1%TK50 RESISTOR	RL 0083.1097.00	RESISTA	MK2	
R83	RL 0,60W 4,75KOHM+-1%TK50 RESISTOR	RL 0083.1097.00	RESISTA	MK2	
R84	RL 0,60W 4,75KOHM+-1%TK50 RESISTOR	RL 0083.1097.00	RESISTA	MK2	
R85	RL 0,60W 10,0KOHM+-1%TK50 RESISTOR	RL 0083.1297.00	RESISTA	MK2	
R87	RL 0,60W 10,0KOHM+-1%TK50 RESISTOR	RL 0083.1297.00	RESISTA	MK2	
R89	RL 0-OHM-WIDERST. 0204 0-OHM RESISTOR	RL 0069.0000.00	DRALORIC	OMA 0204	
R90	RL 0-OHM-WIDERST. 0204 0-OHM RESISTOR	RL 0069.0000.00	DRALORIC	OMA 0204	
R91	RL 0,60W 1KOHM+-1%TK50 RESISTOR	RL 0082.2160.00	RESISTA	MK2	
R92	RL 0,60W 1KOHM+-1%TK50 RESISTOR	RL 0082.2160.00	RESISTA	MK2	
R93	RL 0,60W 1KOHM+-1%TK50 RESISTOR NICHT BESTUECKT/NOT IN PCB	RL 0082.2160.00	RESISTA	MK2	
U1 ..9	BP H11A550 OPTOCOUPLER OPTO COUPLER	BP 0006.0948.00	QUALITY	MCT22XX.4910	
V1 ..9	AK BCY79IX P 45V 200MA TRANSISTOR	AK 0010.3777.00	VALVO	BCY79IX	
V10	AK BCY59IX N 45V 200MA TRANSISTOR	AK 0010.5163.00	VALVO	BCY59IX	
V11	AE BZX79/B6V8 0,5W ZDI ZENER DIODE	AE 0586.9906.00	PHILIPS	BZX79B6V8	
V13	AE BZX55/B5V1 0,5W ZDI ZENER DIODE	AE 0262.5837.00	TELEFUNKEN	BZX55B5V1	
V15	AG 1N4007 GL1000V 1AO RECTIFIER	AG 0013.0310.00	ITT-SEMICO	1N4007	
V16	AG 1N4007 GL1000V 1AO RECTIFIER	AG 0013.0310.00	ITT-SEMICO	1N4007	
V17	AG 1N4007 GL1000V 1AO RECTIFIER	AG 0013.0310.00	ITT-SEMICO	1N4007	
V18	AG 1N4007 GL1000V 1AO RECTIFIER	AG 0013.0310.00	ITT-SEMICO	1N4007	
V19	AG B80C5000/3300 BRGL RECTIFIER	AG 0084.5109.00	TELEFUNKEN	B125C5000/3300SI	
V20	AG B80C700 80V 0A8 BRGL RECTIFIER	AG 0092.9345.00	EDI	PL60	
V32	AD 1N4448 75V UDI DIODE	AD 0012.0700.00	PHILIPS_SE	1N4448 "	
X1	FM BUCHSENLEISTE 24P. CONNECTOR	FM 0349.3012.00	AMPHENOL	57LE20240-27CR-D35	
X2	DY BANDLEITUNG FLATE CABLE	0349.2797.00			
X4	VL WIRE-WRAP PIN L=11,6 WIRE-WRAP PIN	0088.4542.00	DUPONT CON	75403-003	
X5	VL WIRE-WRAP PIN L=11,6 WIRE-WRAP PIN	0088.4542.00	DUPONT CON	75403-003	
X6	VL WIRE-WRAP PIN L=11,6 WIRE-WRAP PIN	0088.4542.00	DUPONT CON	75403-003	
X7	VL WIRE-WRAP PIN L=11,6 WIRE-WRAP PIN	0088.4542.00	DUPONT CON	75403-003	
X8	FV STECKSTIFT GR.2,8 PIN	FV 0495.9462.00	VOGT	3775A/0.5/MS-SN8	

Für diese Unterlage behalten wir uns alle Rechte vor.

MENP1 490 3PUA	Äl	Datum Date	Schaltteilliste für Parts list for	Sachnummer Stock No.	Blatt-Nr. Page
ROHDE&SCHWARZ	18	16.01.98	ED RECHNER PROCESSOR	0349.1910.01 SA	4+

Kennz. Comp. No.	Benennung Designation	Sachnummer Stock No.	Hersteller Manufacturer	Bezeichnung Designation	enthalten in contained in
X9	FV STECKSTIFT GR.2,8 PIN	FV 0495.9462.00	VOGT	3775A/0.5/MS-SN8	
X10	FV STECKSTIFT GR.2,8 PIN	FV 0495.9462.00	VOGT	3775A/0.5/MS-SN8	
X11	VL WIRE-WRAP PIN L=11,6 WIRE-WRAP PIN	0088.4542.00	DUPONT CON	75403-003	
X12	VL WIRE-WRAP PIN L=11,6 WIRE-WRAP PIN	0088.4542.00	DUPONT CON	75403-003	
X13	VL WIRE-WRAP PIN L=11,6 WIRE-WRAP PIN	0088.4542.00	DUPONT CON	75403-003	
X14	VL WIRE-WRAP PIN L=11,6 WIRE-WRAP PIN	0088.4542.00	DUPONT CON	75403-003	
X15	VL WIRE-WRAP PIN L=11,6 WIRE-WRAP PIN	0088.4542.00	DUPONT CON	75403-003	
X16	VL WIRE-WRAP PIN L=11,6 WIRE-WRAP PIN	0088.4542.00	DUPONT CON	75403-003	
X17 ..20	FV STECKSTIFT GR.2,8 PIN	FV 0495.9462.00	VOGT	3775A/0.5/MS-SN8	
X22	FV STECKSTIFT GR.2,8 PIN	FV 0495.9462.00	VOGT	3775A/0.5/MS-SN8	
X23	VL WIRE-WRAP PIN L=11,6 WIRE-WRAP PIN	0088.4542.00	DUPONT CON	75403-003	
X26	VL WIRE-WRAP PIN L=11,6 WIRE-WRAP PIN	0088.4542.00	DUPONT CON	75403-003	
X27	VL WIRE-WRAP PIN L=11,6 WIRE-WRAP PIN	0088.4542.00	DUPONT CON	75403-003	
X28	VL WIRE-WRAP PIN L=11,6 WIRE-WRAP PIN	0088.4542.00	DUPONT CON	75403-003	
X29	VL WIRE-WRAP PIN L=11,6 WIRE-WRAP PIN	0088.4542.00	DUPONT CON	75403-003	
X11B	FP KURZSCHLUSSBUCHSE SHORTING PLUG	FP 0342.1895.00	DUPONT CON	76264-101	
X12B	FP KURZSCHLUSSBUCHSE SHORTING PLUG	FP 0342.1895.00	DUPONT CON	76264-101	
X13B	FP KURZSCHLUSSBUCHSE SHORTING PLUG	FP 0342.1895.00	DUPONT CON	76264-101	
X14B	FP KURZSCHLUSSBUCHSE SHORTING PLUG	FP 0342.1895.00	DUPONT CON	76264-101	
X25A	FP STIFTLEISTE 36P.R2,54 PIN CONNECTOR 17-POLIG/17 PINS	FP 0242.3600.00	BINDER	742-11-0179-00-36	
X25B	FP STIFTLEISTE 36P.R2,54 PIN CONNECTOR 17-POLIG/17 PINS	FP 0242.3600.00	BINDER	742-11-0179-00-36	
X27B	FP KURZSCHLUSSBUCHSE SHORTING PLUG	FP 0342.1895.00	DUPONT CON	76264-101	
X28B	FP KURZSCHLUSSBUCHSE SHORTING PLUG	FP 0342.1895.00	DUPONT CON	76264-101	
X3A	FP STIFTLEISTE 36P.R2,54 PIN CONNECTOR 8-POLIG/8 PINS	FP 0242.3600.00	BINDER	742-11-0179-00-36	
X3B	FP STIFTLEISTE 36P.R2,54 PIN CONNECTOR 8-POLIG/8 PINS	FP 0242.3600.00	BINDER	742-11-0179-00-36	
X4B	FP KURZSCHLUSSBUCHSE SHORTING PLUG	FP 0342.1895.00	DUPONT CON	76264-101	
X5B	FP KURZSCHLUSSBUCHSE SHORTING PLUG	FP 0342.1895.00	DUPONT CON	76264-101	
X6B	FP KURZSCHLUSSBUCHSE SHORTING PLUG	FP 0342.1895.00	DUPONT CON	76264-101	

Für diese Unterlage behalten wir uns alle Rechte vor.

Kennz. Comp. No.	Benennung Designation	Sachnummer Stock No.	Hersteller Manufacturer	Bezeichnung Designation	enthalten in contained in
.	XX ZUGEH.STROML. CIRC.DIAGR. 394.8010 S				
A1	ED RECHNER PROCESSOR HIERZU STROML.349.2100S SEE CIRC.DIAGR.349.2100S	0349.1910.02			0394.9468.01
A2	ED ANZEIGE DISPLAY HIERZU STROML. 394.8310 S SEE CIRC.DIAGR.394.8310 S	0394.8310.02			0394.8061.01
A3	ED ANALOGPLATTE ANALOG BOARD HIERZU STROML. 394.8610S SEE CIRC.DIAGR.394.8610S	0394.8610.02			0394.8261.01
A4	ED BUCHSENPLATTE CONNECTOR BOARD HIERZU STROML. 394.8932 SEE CIRC.DIAGR.394.8932	0394.8932.02			0394.8061.01
D5	HS 27256 PROG.1 D5	0394.8549.00			0394.8532.00
F1	SS SCHMELZS.T500 IEC127/V FUSE T500 H	SS 0009.5463.00	WICKMANN	T500MA H NR.19181	0394.8203.01
F2	ST TEMP.SICH. 133 GRD. 3A THERMOFUSE	ST 0349.1903.00	WICKMANN	TYP X24-3A-250-133 G	0349.2200.00 F
F2	ST TEMP.SICH. 133 GRD. 3A THERMOFUSE	ST 0349.1903.00	WICKMANN	TYP X24-3A-250-133 G	0351.6873.00
N1	BO LM323K + 5V3AO VREGL VOLTAGE REGULATOR	0342.1672.00	NSC	LM-323K	0394.8203.01
S1	FN NETZFILT.M.SPANNUNGSW. MAINS FILTER W.VOLT.SELEK	FN 0099.3313.00	KONFEKTRON	HGN 369-2E	0394.8203.01
S2	XX ENTHALTEN IN INCLUDED IN S1				0394.8203.01
S3	SK WIPPSCH.2POL.AUS SW SWITCH	SK 0553.2925.00	MARQUARDT	1802.1102	0394.8203.01
T1	LT RK 2X16,5/9V TRANSFORMER NUR VAR/ONLY MOD: 02	0349.2200.00	POLYTRONIK	ZEICHNUNG 349.2200	0394.8203.01
T1	LT RINGK.TR.35VA RD80X45 TRANSFORMER NUR VAR/ONLY MOD: 16	0351.6873.00			0394.8203.01
W3	DX KABEL CABLE	0394.9139.00			0394.9151.00
W5	DX KABELSATZ CABLE SET	0394.9151.00			0394.8203.01
W6	XX ENTHALTEN IN INCLUDED IN 394.9151				0394.8203.01
W7	XX ENTHALTEN IN INCLUDED IN 394.9151				0394.8203.01
W8	DX KABEL CABLE	0394.9168.00			0394.9151.00
W9	DX KABEL CABLE	0394.9174.00			0394.9151.00
W10	DX KABEL CABLE	0394.9180.00			0394.9151.00
X1	FV FLACHSTECKER GR 6,3 CONNECTOR	FV 0543.6705.00	AMP	141878-2	0394.8203.01

Für diese Unterlage behalten wir uns alle Rechte vor.

Kennz. Comp. No.	Benennung Designation	Sachnummer Stock No.	Hersteller Manufacturer	Bezeichnung Designation	enthalten in contained in
-	XX ZUGEH.STROML. CIRC.DIAGR. 394.8310 S				
C1	CK 100NF+-5%63VRD2,5H7MKT CAPACITOR	CK 0099.2930.00	ROEDERSTEI	MKT 1826-410-06-4W	
C2	CK 100NF+-5%63VRD2,5H7MKT CAPACITOR	CK 0099.2930.00	ROEDERSTEI	MKT 1826-410-06-4W	
D1	BL SN74154N 1AUF16-DECOD. IC DECODER SN74154N	0244.8509.00	TEXAS	SN74154N	
D2	BL SN74LS138N DEMUX 1:8 DEMULTIPLEXER 1:8	0510.1379.00	TEXAS	SN74LS138N	
H1 ..12	AF QLMP1379 LED RT RD3 LED	0257.4736.00	QUALITY	HLMP-1302.Q7466D	
H13 ..28	AF QLMP1379 LED RT RD3 LED	0257.4736.00	QUALITY	HLMP-1302.Q7466D	
H30	XX ENTHALTEN IN INCLUDED IN S9				
H31	XX ENTHALTEN IN INCLUDED IN S8				
H32	XX ENTHALTEN IN INCLUDED IN S7				
H33	XX ENTHALTEN IN INCLUDED IN S6				
H34	XX ENTHALTEN IN INCLUDED IN				
H35	XX ENTHALTEN IN INCLUDED IN S3				
H36	XX ENTHALTEN IN INCLUDED IN S2				
H37	XX ENTHALTEN IN INCLUDED IN S1				
H38	XX ENTHALTEN IN INCLUDED IN S19				
H39	XX ENTHALTEN IN INCLUDED IN S18				
H40	XX ENTHALTEN IN INCLUDED IN S12				
H41	XX ENTHALTEN IN INCLUDED IN S15				
H42	XX ENTHALTEN IN INCLUDED IN S17				
H50	BP QDSP3845 1X +-ANZ RTR LED-DISPLAY	0292.5493.00	HEWLETT_PA	QDSP-3845 HKL D+E	
H51 ..54	BP QDSP3843 1X 7SEGM RTR LED-DISPLAY	0293.6235.00	HEWLETT_PA	QDSP-3843 HKL D,E	
H55	BP QDSP4332 +-ANZ RTR LED-DISPLAY	0302.7934.00	HEWLETT_PA	QDSP-4332 HKL D+E	
H56	BP 5082-7610 7SEGM RTL LED-DISPLAY	0293.6241.00	HEWLETT_PA	QDSP-4330 HKL D+E	
R1 ..22	RL 0,60W 5,62KOHM+-1%TK50 RESISTOR	RL 0082.2190.00	RESISTA	MK2	
R23 ..36	RL 0,60W 267 OHM+-1%TK50 RESISTOR	RL 0083.0161.00	RESISTA	MK2	
R37 ..44	RL 0,60W26,70 OHM+-1%TK50 RESISTOR	RL 0082.9265.00	RESISTA	MK2	
S1	SB TASTER GRAU MIT LED RT PUSHBUTTON	SB 0099.7102.00	PREH	M 75120061	
S2	SB TASTER GRAU MIT LED RT PUSHBUTTON	SB 0099.7102.00	PREH	M 75120061	
S3	SB TASTER GRAU MIT LED RT PUSHBUTTON	SB 0099.7102.00	PREH	M 75120061	

Für diese Unterlage behalten wir uns alle Rechte vor.

Kennz. Comp. No.	Benennung Designation	Sachnummer Stock No.	Hersteller Manufacturer	Bezeichnung Designation	enthalten in contained in
S4	SB TASTER 1POL.GEDR.SCH. PUSH BUTTON SWITCH	SB 0099.5697.00	PREH	75120-013/0000	
S5 ..9	SB TASTER GRAU MIT LED RT PUSHBUTTON	SB 0099.7102.00	PREH	M 75120061	
S10	SB TASTER 1POL.GEDR.SCH. PUSH BUTTON SWITCH	SB 0099.5697.00	PREH	75120-013/0000	
S11	SB TASTER 1POL.GEDR.SCH. PUSH BUTTON SWITCH	SB 0099.5697.00	PREH	75120-013/0000	
S12	SB TASTER GRAU MIT LED RT PUSHBUTTON	SB 0099.7102.00	PREH	M 75120061	
S13	SB TASTER 1POL.GEDR.SCH. PUSH BUTTON SWITCH	SB 0099.5697.00	PREH	75120-013/0000	
S14	SB TASTER 1POL.GEDR.SCH. PUSH BUTTON SWITCH	SB 0099.5697.00	PREH	75120-013/0000	
S15	SB TASTER GRAU MIT LED RT PUSHBUTTON	SB 0099.7102.00	PREH	M 75120061	
S16	SB TASTER 1POL.GEDR.SCH. PUSH BUTTON SWITCH	SB 0099.5697.00	PREH	75120-013/0000	
S17	SB TASTER GRAU MIT LED RT PUSHBUTTON	SB 0099.7102.00	PREH	M 75120061	
S18	SB TASTER GRAU MIT LED RT PUSHBUTTON	SB 0099.7102.00	PREH	M 75120061	
S19	SB TASTER GRAU MIT LED RT PUSHBUTTON	SB 0099.7102.00	PREH	M 75120061	
V1 ..14	AK 2N4033 P 80V1000MA TRANSISTOR	AK 0083.6460.00	VALVO	2N4033	
V15 ..18	AD 1N4448 75V UDI DIODE	AD 0012.0700.00	PHILIPS_SE	1N4448 "	
V20 ..27	AK BC517 N 30V DARL TRANSISTOR	AK 0282.2133.00	VALVO	BC517	
X1A	FP STIFTLEISTE 36P.R2,54 PIN CONNECTOR 13-POLIG/13 PINS	FP 0242.3600.00	BINDER	742-11-0179-00-36	
X1B	FP STIFTLEISTE 36P.R2,54 PIN CONNECTOR 13-POLIG/13 PINS	FP 0242.3600.00	BINDER	742-11-0179-00-36	

Für diese Unterlage behalten wir uns alle Rechte vor.

Kennz. Comp. No.	Benennung Designation	Sachnummer Stock No.	Hersteller Manufacturer	Bezeichnung Designation	enthalten in contained in
.	XX VARIANTENERKLAERUNG IDENTIFICATION OF MODELS VAR 02 = GRUNDAUSFUEHRUNG MOD 02 = BASIC MODEL				
..	XX ZUGEH.STROML. CIRC.DIAGR. 394.8610 S				
B501	EQ 4,096000MHZ CL30 HC43U CRYSTAL 4,096000 MHZ	EQ 0091.0315.00	KVG	N. R&S SACHNUMMER	
C101	CE 100UF+-20%35V RM5 ELECTROLYTIC CAPACITOR	0008.7510.00	PHILIPS_CO	2222 116 90042	
C102	CE 100UF+-20%35V RM5 ELECTROLYTIC CAPACITOR	0008.7510.00	PHILIPS_CO	2222 116 90042	
C103	CE 100UF+-20%35V RM5 ELECTROLYTIC CAPACITOR	0008.7510.00	PHILIPS_CO	2222 116 90042	
C104	CE 100UF+-20%35V RM5 ELECTROLYTIC CAPACITOR	0008.7510.00	PHILIPS_CO	2222 116 90042	
C105	CE 100UF+-20%35V RM5 ELECTROLYTIC CAPACITOR	0008.7510.00	PHILIPS_CO	2222 116 90042	
C106	CC 1NF+-10%63V K2000 CERAMIC CAPACITOR	CC 0022.0784.00	PHILIPS_CO	2222 630	
C108	CK 100NF+-5%63VRD2,5H7MKT CAPACITOR	CK 0099.2930.00	ROEDERSTEI	MKT 1826-410-06-4W	
C109	CK 100NF+-5%63VRD2,5H7MKT CAPACITOR	CK 0099.2930.00	ROEDERSTEI	MKT 1826-410-06-4W	
C110	CK 100NF+-5%63VRD2,5H7MKT CAPACITOR	CK 0099.2930.00	ROEDERSTEI	MKT 1826-410-06-4W	
C111	CK 100NF+-5%63VRD2,5H7MKT CAPACITOR	CK 0099.2930.00	ROEDERSTEI	MKT 1826-410-06-4W	
C202	CC 560PF+-10%3X4R2000 CAPACITOR	CC 0087.7002.00	PHILIPS_CO	2222 632 51561	
C203	CC 1NF+-10%63V K2000 CERAMIC CAPACITOR	CC 0022.0784.00	PHILIPS_CO	2222 630	
C204	CC 27PF+-2%4X5NP0 CAPACITOR	CC 0087.6470.00	PHILIPS_CO	2222 678	
C205	CC 27PF+-2%4X5NP0 CAPACITOR	CC 0087.6470.00	PHILIPS_CO	2222 678	
C207	CC 82PF+-2%6X7NP0 CAPACITOR	CC 0087.6535.00	PHILIPS_CO	2222 678 10 829	
C208	CC 10NF-20+50%7X8R4000 CAPACITOR	CC 0087.7525.00	VALVO	2222 640 51103	
C209	CC 68PF+-2%6X7NP0 CAPACITOR	CC 0087.6529.00	PHILIPS_CO	2222 678	
C211	CC 82PF+-2%6X7NP0 CAPACITOR	CC 0087.6535.00	PHILIPS_CO	2222 678 10 829	
C212	CC 8,2PF+-0,25PF3X4NP0 CAPACITOR	CC 0087.6412.00	VALVO	2222 678	
C213	CC 27PF+-2%4X5NP0 CAPACITOR	CC 0087.6470.00	PHILIPS_CO	2222 678	
C214	CC 4,7NF+-10%6X9R2000 CAPACITOR	CC 0087.7102.00	PHILIPS_CO	2222 630 01 472	
C302	CC 560PF+-10%3X4R2000 CAPACITOR	CC 0087.7002.00	PHILIPS_CO	2222 632 51561	
C303	CC 1NF+-10%63V K2000 CERAMIC CAPACITOR	CC 0022.0784.00	PHILIPS_CO	2222 630	
C304	CC 27PF+-2%4X5NP0 CAPACITOR	CC 0087.6470.00	PHILIPS_CO	2222 678	
C305	CC 27PF+-2%4X5NP0 CAPACITOR	CC 0087.6470.00	PHILIPS_CO	2222 678	
C307	CC 82PF+-2%6X7NP0 CAPACITOR	CC 0087.6535.00	PHILIPS_CO	2222 678 10 829	
C308	CC 10NF-20+50%7X8R4000 CAPACITOR	CC 0087.7525.00	VALVO	2222 640 51103	
C309	CC 68PF+-2%6X7NP0 CAPACITOR	CC 0087.6529.00	PHILIPS_CO	2222 678	
C311	CC 82PF+-2%6X7NP0 CAPACITOR	CC 0087.6535.00	PHILIPS_CO	2222 678 10 829	
C312	CC 8,2PF+-0,25PF3X4NP0 CAPACITOR	CC 0087.6412.00	VALVO	2222 678	
C313	CC 27PF+-2%4X5NP0 CAPACITOR	CC 0087.6470.00	PHILIPS_CO	2222 678	
C314	CC 4,7NF+-10%6X9R2000 CAPACITOR	CC 0087.7102.00	PHILIPS_CO	2222 630 01 472	
C401	CC 4,7NF+-10%6X9R2000 CAPACITOR	CC 0087.7102.00	PHILIPS_CO	2222 630 01 472	

Für diese Unterlage behalten wir uns alle Rechte vor.

Kennz. Comp. No.	Benennung Designation	Sachnummer Stock No.	Hersteller Manufacturer	Bezeichnung Designation	enthalten in contained in
C402	CC 470PF+-10%3X4R2000 CAPACITOR	CC 0087.6993.00	PHILIPS_CO	2222 630 51471	
C403	CC 47PF+-2%5X6NP0 CAPACITOR	CC 0087.6506.00	PHILIPS_CO	2222 678	
C405	CC 1NF+-10%63V K2000 CERAMIC CAPACITOR	CC 0022.0784.00	PHILIPS_CO	2222 630	
C500	CC 2,2NF+-10%5X6R2000 CAPACITOR	CC 0087.7060.00	PHILIPS_CO	2222 630 51222	
C501	CK 10NF +-1% 63V RM5 KP POLYPROPYLENE CAPACITOR	CK 0007.7652.00	ROEDERSTEI	KP1830-310 06 1 3 W	
C502	CK 220PF +-1% 100V RM5 KP POLYPROPYLENE CAPACITOR	CK 0007.7552.00	ROEDERSTEI	KP1830-122 01 1 3 W	
C503	CK 100NF+-5%63VRD2,5H7MKT CAPACITOR	CK 0099.2930.00	ROEDERSTEI	MKT 1826-410-06-4W	
C504	CK 100NF+-5%63VRD2,5H7MKT CAPACITOR	CK 0099.2930.00	ROEDERSTEI	MKT 1826-410-06-4W	
C505	CK 1,5NF +-1% 100V RM5 KP POLYPROPYLENE CAPACITOR	CK 0007.7600.00	WESTERMANN	FKP2	
C506	CK 100NF+-5%63VRD2,5H7MKT CAPACITOR	CK 0099.2930.00	ROEDERSTEI	MKT 1826-410-06-4W	
C507	CC 100PF+-2%4X5N750 CAPACITOR	CC 0087.6906.00	PHILIPS_CO	2222 678 58101	
C508	CC 27PF+-2%4X5NP0 CAPACITOR	CC 0087.6470.00	PHILIPS_CO	2222 678	
C510	CC 1NF+-10%63V K2000 CERAMIC CAPACITOR	CC 0022.0784.00	PHILIPS_CO	2222 630	
C512 ..515	CC 330PF+-10%3X4R2000 CAPACITOR	CC 0087.6970.00	PHILIPS_CO	2222 630 51331	
C516	CK 100NF+-5%63VRD2,5H7MKT CAPACITOR	CK 0099.2930.00	ROEDERSTEI	MKT 1826-410-06-4W	
D101 ..104	BL MM74HC259N 8B.A.LATCH 8 BIT ADDRESSABLE LATCH	0394.9097.00	PHILIPS_SE	(PC)74HC259N(P)	
D105	BL MM74HC138N 3/8L.DECOD 3-TO-8 LINE DECODER	0571.3165.00	PHILIPS_SE	(PC)74HC138N(P)	
D201	BL CD4052BE 2X4CHAN.MUX MULTIPLEXER/DEMULTIPLEXER	0243.1200.00	HARRIS	CD4052BE	
D202	BL CD4052BE 2X4CHAN.MUX MULTIPLEXER/DEMULTIPLEXER	0243.1200.00	HARRIS	CD4052BE	
D203	BL MM74HC259N 8B.A.LATCH 8 BIT ADDRESSABLE LATCH	0394.9097.00	PHILIPS_SE	(PC)74HC259N(P)	
D301	BL CD4052BE 2X4CHAN.MUX MULTIPLEXER/DEMULTIPLEXER	0243.1200.00	HARRIS	CD4052BE	
D302	BL CD4052BE 2X4CHAN.MUX MULTIPLEXER/DEMULTIPLEXER	0243.1200.00	HARRIS	CD4052BE	
D303	BL MM74HC259N 8B.A.LATCH 8 BIT ADDRESSABLE LATCH	0394.9097.00	PHILIPS_SE	(PC)74HC259N(P)	
D401	BL SCL4052BE 2X4CHAN.MUX 2/4CHANNEL ANALOG MUX	0349.3158.00	SSS	SCL4052BE SEL.	
D402	BL CD4052BE 2X4CHAN.MUX MULTIPLEXER/DEMULTIPLEXER	0243.1200.00	HARRIS	CD4052BE	
D403	BL MM74HC259N 8B.A.LATCH 8 BIT ADDRESSABLE LATCH	0394.9097.00	PHILIPS_SE	(PC)74HC259N(P)	
D404	BL SCL4052BE 2X4CHAN.MUX 2/4CHANNEL ANALOG MUX	0349.3158.00	SSS	SCL4052BE SEL.	
D501	BL CD4051BE 8CH. MUX MULTIPLEXER	0339.4174.00	RCA	CD4051BE	
D502	BL CD4041UBE 4X DRIVER DRIVER	0086.7196.00	RCA	CD4041UBE	
D511	BG PCF0455P005 GATEARRAY GATE ARRAY	0394.9000.00	PHILIPS_SE	LNBF004	
K101	SR 5V360OHM1MAL1RH-JC-GEH RELAY	SR 0412.0027.00	HAMLIN	HE 721 A 6732	
L201	LD 100 UH10%8,000HM0,084A CHOKE	LD 0067.3101.00	DALE	IM2	
L301	LD 100 UH10%8,000HM0,084A CHOKE	LD 0067.3101.00	DALE	IM2	
N101	BO LM340T + 5V1A0 VREGL VOLTAGE REGULATOR	BO 0336.4615.00	NSC	LM-340T5	
N102	BO UA7905UC -5V1A0 VREGL VOLTAGE REGULATOR	BO 0282.5449.00	NSC	LM7905 CT	
N201	BO OP07CP OPAMP OPERATIONAL AMPLIFIER	BO 0394.8884.00	PMI	OP 07 CP	
N202	BO LF412CN 2XFET OPAMP OPERATIONAL AMPLIFIER	0356.0521.00	NSC	LF412CN	

Für diese Unterlage behalten wir uns alle Rechte vor.

MENP1 490 3PUA	Äl	Datum Date	Schaltteilliste für Parts list for	Sachnummer Stock No.	Blatt-Nr. Page
ROHDE&SCHWARZ	20	16.01.98	ED ANALOGPLATTE ANALOG BOARD	**0394.8610.01 SA**	2+

Kennz. Comp. No.	Benennung Designation	Sachnummer Stock No.	Hersteller Manufacturer	Bezeichnung Designation	enthalten in contained in
N301	BO OP07CP OPAMP OPERATIONAL AMPLIFIER	BO 0394.8884.00	PMI	OP 07 CP	
N302	BO LF412CN 2XFET OPAMP OPERATIONAL AMPLIFIER	0356.0521.00	NSC	LF412CN	
N401	BO LF411CN FET OPAMP OPERATIONAL AMPLIFIER	0349.3058.00	NSC	LF411CN	
N501	BO LF412CN 2XFET OPAMP OPERATIONAL AMPLIFIER	0356.0521.00	NSC	LF412CN	
N502	BO LM318N OPAMP OPERATIONAL AMPLIFIER	0394.8903.00	NSC	LM 318 N	
N503	BO LM339N 4X COMPAR COMPARATOR	BO 0342.2062.00	NSC	LM339N	
N504	BO REF02CP 5V 20MA VREF VOLTAGE REFERENCE	BO 0394.8732.00	PMI	REF-02CP	
N505	BO LF411CN FET OPAMP OPERATIONAL AMPLIFIER	0349.3058.00	NSC	LF411CN	
N506	BO LF411CN FET OPAMP OPERATIONAL AMPLIFIER	0349.3058.00	NSC	LF411CN	
N507	BO LM311N COMPAR COMPARATOR	BO 0394.8755.00	NSC	LM311N	
N508	BO LF412CN 2XFET OPAMP OPERATIONAL AMPLIFIER	0356.0521.00	NSC	LF412CN	
R105	RL 0,60W 10,0KOHM+-1%TK50 RESISTOR	RL 0083.1297.00	RESISTA	MK2	
R106	RL 0,60W 1KOHM+-1%TK50 RESISTOR	RL 0082.2160.00	RESISTA	MK2	
R107	RL 0,60W 1KOHM+-1%TK50 RESISTOR	RL 0082.2160.00	RESISTA	MK2	
R108	RL 0,60W 1KOHM+-1%TK50 RESISTOR	RL 0082.2160.00	RESISTA	MK2	
R109	RL 0,60W 2,21KOHM+-1%TK50 RESISTOR	RL 0082.2477.00	RESISTA	MK2	
R111	RL 0,60W 475 OHM+-1%TK50 RESISTOR	RL 0083.0390.00	RESISTA	MK2	
R112	RL 0,60W 475 OHM+-1%TK50 RESISTOR	RL 0083.0390.00	RESISTA	MK2	
R113	RL 0,60W 475 OHM+-1%TK50 RESISTOR	RL 0083.0390.00	RESISTA	MK2	
R114	RL 0,60W 475 OHM+-1%TK50 RESISTOR	RL 0083.0390.00	RESISTA	MK2	
R201	RL 0,60W 10,0KOHM+-1%TK50 RESISTOR	RL 0083.1297.00	RESISTA	MK2	
R202	RL 0,60W 10,0KOHM+-1%TK50 RESISTOR	RL 0083.1297.00	RESISTA	MK2	
R203	RL 0,60W 475 KOHM+-1%TK50 RESISTOR	RL 0083.2593.00	RESISTA	MK2	
R204	RL 0,60W 475 KOHM+-1%TK50 RESISTOR	RL 0083.2593.00	RESISTA	MK2	
R205	RL 0,60W 10MOHM+-1%TK50 RESISTOR	RL 0620.0318.00	RESISTA	MK2	
R206	RL 0,60W 221 KOHM+-1%TK50 RESISTOR	RL 0083.2270.00	RESISTA	MK2	
R207	RL 0,60W 221 KOHM+-1%TK50 RESISTOR	RL 0083.2270.00	RESISTA	MK2	
R208	RL 0,60W 10MOHM+-1%TK50 RESISTOR	RL 0620.0318.00	RESISTA	MK2	
R209	RL 0,60W 6,81KOHM+-1%TK50 RESISTOR	RL 0082.2560.00	RESISTA	MK2	
R210	RL 0,60W 2,21KOHM+-1%TK50 RESISTOR	RL 0082.2477.00	RESISTA	MK2	
R211	RL 0,60W 121 OHM+-1%TK50 RESISTOR	RL 0082.9859.00	RESISTA	MK2	
R212	RL 0,60W 130 KOHM+-1%TK50 RESISTOR	RL 0083.2093.00	RESISTA	MK2	
R213	RL 0,60W 100KOHM+-1%TK50 RESISTOR	RL 0082.1764.00	RESISTA	MK2	
R214	RN 9X100KOHM+-2%SIL10 H5 RESISTOR NETWORK	RN 0542.5092.00	BI_TECHNOL	L 10 1 S 104 M*	
R215	RL 0,60W4,75MOHM+-1%TK50 METALFILMRESISTOR	RL 0099.8250.00	RESISTA	MK2	
R216	RL 0,35W33,2KOHM+-0,1%T25 RESISTOR	RL 0084.4060.00	DRALORIC	SMA0207	
R217	RL 0,35W33,2KOHM+-0,1%T25 RESISTOR	RL 0084.4060.00	DRALORIC	SMA0207	
R218	RL 0,60W 475 OHM+-1%TK50 RESISTOR	RL 0083.0390.00	RESISTA	MK2	

Für diese Unterlage behalten wir uns alle Rechte vor.

Kennz. Comp. No.	Benennung Designation	Sachnummer Stock No.	Hersteller Manufacturer	Bezeichnung Designation	enthalten in contained in
R220	RL 0,60W4,75MOHM+-1%TK50 METALFILMRESISTOR	RL 0099.8250.00	RESISTA	MK2	
R221	RL 0,60W 475 OHM+-1%TK50 RESISTOR	RL 0083.0390.00	RESISTA	MK2	
R223	RL 0,35W10,0KOHM+-0,1%T25 RESISTOR	RL 0084.3064.00	DRALORIC	SMA0207	
R224	RL 0,35W10,0KOHM+-0,1%T25 RESISTOR	RL 0084.3064.00	DRALORIC	SMA0207	
R225	RL 0,60W 22,1KOHM+-1%TK50 RESISTOR	RL 0083.1545.00	RESISTA	MK2	
R226	RL 0,60W 15,0KOHM+-1%TK50 RESISTOR	RL 0083.1400.00	RESISTA	MK2	
R227	RL 0,60W 47,5KOHM+-1%TK50 RESISTOR	RL 0083.1800.00	RESISTA	MK2	
R228	RL 0,60W 562 KOHM+-1%TK50 RESISTOR	RL 0083.2664.00	RESISTA	MK2	
R229	RL 0,60W 150 KOHM+-1%TK50 RESISTOR	RL 0083.2129.00	RESISTA	MK2	
R230	RL 0,60W4,75MOHM+-1%TK50 METALFILMRESISTOR	RL 0099.8250.00	RESISTA	MK2	
R231	RL 0,60W 47,5KOHM+-1%TK50 RESISTOR	RL 0083.1800.00	RESISTA	MK2	
R232	RL 0,60W 562 KOHM+-1%TK50 RESISTOR	RL 0083.2664.00	RESISTA	MK2	
R233	RL 0,60W 150 KOHM+-1%TK50 RESISTOR	RL 0083.2129.00	RESISTA	MK2	
R234	RL 0,60W4,75MOHM+-1%TK50 METALFILMRESISTOR	RL 0099.8250.00	RESISTA	MK2	
R235	RL 0,60W 10,0KOHM+-1%TK50 RESISTOR	RL 0083.1297.00	RESISTA	MK2	
R236	RL 0,60W147 KOHM+-1%TK50 RESISTOR	RL 0082.1770.00	RESISTA	MK2	
R237	RL 0,60W147 KOHM+-1%TK50 RESISTOR	RL 0082.1770.00	RESISTA	MK2	
R238	RL 0,60W 294 KOHM+-1%TK50 RESISTOR	RL 0083.2393.00	RESISTA	MK2	
R239	RL 0,60W 590 KOHM+-1%TK50 RESISTOR	RL 0083.2670.00	RESISTA	MK2	
R240	RL 0,60W1,21MOHM+-1%TK50 METALFILMRESISTOR	RL 0099.8115.00	RESISTA	MK2	
R241	RL 0,60W2,43MOHM+-1%TK50 METALFILMRESISTOR	RL 0099.8180.00	RESISTA	MK2	
R242	RL 0,60W4,75MOHM+-1%TK50 METALFILMRESISTOR	RL 0099.8250.00	RESISTA	MK2	
R243	RL 0,60W 10MOHM+-1%TK50 RESISTOR	RL 0620.0318.00	RESISTA	MK2	
R244	RL 0,60W 274 KOHM+-1%TK50 RESISTOR	RL 0083.2364.00	RESISTA	MK2	
R245	RF 0,125W 1GOHM+-30% RESISTOR 0,125W	0350.2768.00	ELECTRONIC	CS 005	
R301	RL 0,60W 10,0KOHM+-1%TK50 RESISTOR	RL 0083.1297.00	RESISTA	MK2	
R302	RL 0,60W 10,0KOHM+-1%TK50 RESISTOR	RL 0083.1297.00	RESISTA	MK2	
R303	RL 0,60W 475 KOHM+-1%TK50 RESISTOR	RL 0083.2593.00	RESISTA	MK2	
R304	RL 0,60W 475 KOHM+-1%TK50 RESISTOR	RL 0083.2593.00	RESISTA	MK2	
R305	RL 0,60W 10MOHM+-1%TK50 RESISTOR	RL 0620.0318.00	RESISTA	MK2	
R306	RL 0,60W 221 KOHM+-1%TK50 RESISTOR	RL 0083.2270.00	RESISTA	MK2	
R307	RL 0,60W 221 KOHM+-1%TK50 RESISTOR	RL 0083.2270.00	RESISTA	MK2	
R308	RL 0,60W 10MOHM+-1%TK50 RESISTOR	RL 0620.0318.00	RESISTA	MK2	
R309	RL 0,60W 6,81KOHM+-1%TK50 RESISTOR	RL 0082.2560.00	RESISTA	MK2	
R310	RL 0,60W 475 OHM+-1%TK50 RESISTOR	RL 0083.0390.00	RESISTA	MK2	
R311	RL 0,60W 121 OHM+-1%TK50 RESISTOR	RL 0082.9859.00	RESISTA	MK2	
R312	RL 0,60W 130 KOHM+-1%TK50 RESISTOR	RL 0083.2093.00	RESISTA	MK2	
R313	RL 0,60W 100KOHM+-1%TK50 RESISTOR	RL 0082.1764.00	RESISTA	MK2	
R314	RN 9X100KOHM+-2%SIL10 H5 RESISTOR NETWORK	RN 0542.5092.00	BI_TECHNOL	L 10 1 S 104 M*	

Für diese Unterlage behalten wir uns alle Rechte vor.

Kennz. Comp. No.	Benennung Designation	Sachnummer Stock No.	Hersteller Manufacturer	Bezeichnung Designation	enthalten in contained in
R315	RL 0,60W4,75MOHM+-1%TK50 METALFILMRESISTOR	RL 0099.8250.00	RESISTA	MK2	
R316	RL 0,35W33,2KOHM+-0,1%T25 RESISTOR	RL 0084.4060.00	DRALORIC	SMA0207	
R317	RL 0,35W33,2KOHM+-0,1%T25 RESISTOR	RL 0084.4060.00	DRALORIC	SMA0207	
R318	RL 0,60W 475 OHM+-1%TK50 RESISTOR	RL 0083.0390.00	RESISTA	MK2	
R320	RL 0,60W4,75MOHM+-1%TK50 METALFILMRESISTOR	RL 0099.8250.00	RESISTA	MK2	
R323	RL 0,35W10,0KOHM+-0,1%T25 RESISTOR	RL 0084.3064.00	DRALORIC	SMA0207	
R324	RL 0,35W10,0KOHM+-0,1%T25 RESISTOR	RL 0084.3064.00	DRALORIC	SMA0207	
R325	RL 0,60W 22,1KOHM+-1%TK50 RESISTOR	RL 0083.1545.00	RESISTA	MK2	
R326	RL 0,60W 15,0KOHM+-1%TK50 RESISTOR	RL 0083.1400.00	RESISTA	MK2	
R327	RL 0,60W 47,5KOHM+-1%TK50 RESISTOR	RL 0083.1800.00	RESISTA	MK2	
R328	RL 0,60W 562 KOHM+-1%TK50 RESISTOR	RL 0083.2664.00	RESISTA	MK2	
R329	RL 0,60W 150 KOHM+-1%TK50 RESISTOR	RL 0083.2129.00	RESISTA	MK2	
R330	RL 0,60W4,75MOHM+-1%TK50 METALFILMRESISTOR	RL 0099.8250.00	RESISTA	MK2	
R331	RL 0,60W 47,5KOHM+-1%TK50 RESISTOR	RL 0083.1800.00	RESISTA	MK2	
R332	RL 0,60W 562 KOHM+-1%TK50 RESISTOR	RL 0083.2664.00	RESISTA	MK2	
R333	RL 0,60W 150 KOHM+-1%TK50 RESISTOR	RL 0083.2129.00	RESISTA	MK2	
R334	RL 0,60W4,75MOHM+-1%TK50 METALFILMRESISTOR	RL 0099.8250.00	RESISTA	MK2	
R335	RL 0,60W 10,0KOHM+-1%TK50 RESISTOR	RL 0083.1297.00	RESISTA	MK2	
R336	RL 0,60W147 KOHM+-1%TK50 RESISTOR	RL 0082.1770.00	RESISTA	MK2	
R337	RL 0,60W147 KOHM+-1%TK50 RESISTOR	RL 0082.1770.00	RESISTA	MK2	
R338	RL 0,60W 294 KOHM+-1%TK50 RESISTOR	RL 0083.2393.00	RESISTA	MK2	
R339	RL 0,60W 590 KOHM+-1%TK50 RESISTOR	RL 0083.2670.00	RESISTA	MK2	
R340	RL 0,60W1,21MOHM+-1%TK50 METALFILMRESISTOR	RL 0099.8115.00	RESISTA	MK2	
R341	RL 0,60W2,43MOHM+-1%TK50 METALFILMRESISTOR	RL 0099.8180.00	RESISTA	MK2	
R342	RL 0,60W4,75MOHM+-1%TK50 METALFILMRESISTOR	RL 0099.8250.00	RESISTA	MK2	
R343	RL 0,60W 10MOHM+-1%TK50 RESISTOR	RL 0620.0318.00	RESISTA	MK2	
R344	RL 0,60W 274 KOHM+-1%TK50 RESISTOR	RL 0083.2364.00	RESISTA	MK2	
R345	RF 0,125W 1GOHM+-30% RESISTOR 0,125W	0350.2768.00	ELECTRONIC	CS 005	
R400	RL 0,60W 475 OHM+-1%TK50 RESISTOR	RL 0083.0390.00	RESISTA	MK2	
R401	RL 0,60W 121 OHM+-1%TK50 RESISTOR	RL 0082.9859.00	RESISTA	MK2	
R402	RL 0,60W 121 OHM+-1%TK50 RESISTOR	RL 0082.9859.00	RESISTA	MK2	
R403	RL 0,60W4,32MOHM+-1%TK50 METALFILMRESISTOR	RL 0099.8244.00	ROEDERSTEI	MK2	
R404	RL 0,60W4,75MOHM+-1%TK50 METALFILMRESISTOR	RL 0099.8250.00	RESISTA	MK2	
R405	RL 0,60W 90,9 OHM+-1%TK50 RESISTOR	RL 0082.9742.00	RESISTA	MK2	
R406	RL 0,60W 10,0KOHM+-1%TK50 RESISTOR	RL 0083.1297.00	RESISTA	MK2	
R407	RL 0,60W 30,1KOHM+-1%TK50 RESISTOR	RL 0083.1639.00	RESISTA	MK2	
R408	RL 0,60W 301 KOHM+-1%TK50 RESISTOR	RL 0083.2406.00	RESISTA	MK2	
R409	RL 0,60W3,01MOHM+-1%TK50 METALFILMRESISTOR	RL 0099.8209.00	ROEDERSTEI	MK2	
R410	RL 0,60W 121 OHM+-1%TK50 RESISTOR	RL 0082.9859.00	RESISTA	MK2	

Für diese Unterlage behalten wir uns alle Rechte vor.

Kennz. Comp. No.	Benennung Designation	Sachnummer Stock No.	Hersteller Manufacturer	Bezeichnung Designation	enthalten in contained in
R411	RL 0,60W 475 OHM+-1%TK50 RESISTOR	RL 0083.0390.00	RESISTA	MK2	
R412	RL 0,60W 10MOHM+-1%TK50 RESISTOR	RL 0620.0318.00	RESISTA	MK2	
R413	RL 0,60W 10MOHM+-1%TK50 RESISTOR	RL 0620.0318.00	RESISTA	MK2	
R414	RL 0,60W 10MOHM+-1%TK50 RESISTOR	RL 0620.0318.00	RESISTA	MK2	
R415	RL 0,60W147 KOHM+-1%TK50 RESISTOR	RL 0082.1770.00	RESISTA	MK2	
R416	RL 0,60W147 KOHM+-1%TK50 RESISTOR	RL 0082.1770.00	RESISTA	MK2	
R417	RL 0,60W 294 KOHM+-1%TK50 RESISTOR	RL 0083.2393.00	RESISTA	MK2	
R418	RL 0,60W 590 KOHM+-1%TK50 RESISTOR	RL 0083.2670.00	RESISTA	MK2	
R419	RL 0,60W1,21MOHM+-1%TK50 METALFILMRESISTOR	RL 0099.8115.00	RESISTA	MK2	
R420	RL 0,60W2,43MOHM+-1%TK50 METALFILMRESISTOR	RL 0099.8180.00	RESISTA	MK2	
R421	RL 0,60W4,75MOHM+-1%TK50 METALFILMRESISTOR	RL 0099.8250.00	RESISTA	MK2	
R422	RL 0,60W 10MOHM+-1%TK50 RESISTOR	RL 0620.0318.00	RESISTA	MK2	
R423	RL 0,60W 4,75KOHM+-1%TK50 RESISTOR	RL 0083.1097.00	RESISTA	MK2	
R500	RL 0,60W 475 OHM+-1%TK50 RESISTOR	RL 0083.0390.00	RESISTA	MK2	
R501	RL 0,60W 5,62KOHM+-1%TK50 RESISTOR	RL 0082.2190.00	RESISTA	MK2	
R502	RL 0,60W 5,62KOHM+-1%TK50 RESISTOR	RL 0082.2190.00	RESISTA	MK2	
R503	RL 0,60W 10,0KOHM+-1%TK50 RESISTOR	RL 0083.1297.00	RESISTA	MK2	
R504	RL 0,60W 619 OHM+-1%TK50 RESISTOR	RL 0083.0478.00	RESISTA	MK2	
R505	RL 0,60W 100KOHM+-1%TK50 RESISTOR	RL 0082.1764.00	RESISTA	MK2	
R506	RL 0,60W 68,1 OHM+-1%TK50 RESISTOR	RL 0082.9636.00	RESISTA	MK2	
R507	RL 0,60W 750 KOHM+-1%TK50 RESISTOR	RL 0083.2770.00	RESISTA	MK2	
R508	RL 0,60W 10,0KOHM+-1%TK50 RESISTOR	RL 0083.1297.00	RESISTA	MK2	
R509	RL 0,60W 10,0KOHM+-1%TK50 RESISTOR	RL 0083.1297.00	RESISTA	MK2	
R510	RL 0,60W 475 OHM+-1%TK50 RESISTOR	RL 0083.0390.00	RESISTA	MK2	
R511	RL 0,60W 5,62KOHM+-1%TK50 RESISTOR	RL 0082.2190.00	RESISTA	MK2	
R512	RL 0,60W 27,4KOHM+-1%TK50 RESISTOR	RL 0082.2583.00	RESISTA	MK2	
R513	RL 0,35W270KOHM+-0,1%TK25 RESISTOR	0653.2649.00	DRALORIC	SMA 0207	
R514	RL 0,60W 47,5KOHM+-1%TK50 RESISTOR	RL 0083.1800.00	RESISTA	MK2	
R515	RL 0,35W98,8KOHM+-0,1%T25 RESISTOR	RL 0084.4977.00	DRALORIC	SMA0207	
R516	RL 0,60W 33,2KOHM+-1%TK50 RESISTOR	RL 0083.1674.00	RESISTA	MK2	
R517	RL 0,60W22,10 OHM+-1%TK50 RESISTOR	RL 0082.9188.00	RESISTA	MK2	
R518	RL 0,60W 2,21KOHM+-1%TK50 RESISTOR	RL 0082.2477.00	RESISTA	MK2	
R519	RL 0,60W 2,21KOHM+-1%TK50 RESISTOR	RL 0082.2477.00	RESISTA	MK2	
R520	RL 0,60W 100 OHM+-1%TK50 RESISTOR	RL 0082.6543.00	RESISTA	MK2	
R521	RL 0,60W 6,81KOHM+-1%TK50 RESISTOR	RL 0082.2560.00	RESISTA	MK2	
R522	RL 0,60W 1MOHM+-1%TK50 RESISTOR	RL 0082.7862.00	RESISTA	MK2	
R523	RL 0,60W 100KOHM+-1%TK50 RESISTOR	RL 0082.1764.00	RESISTA	MK2	
R524	RL 0,60W 100KOHM+-1%TK50 RESISTOR	RL 0082.1764.00	RESISTA	MK2	
R525	RL 0,60W 10,0KOHM+-1%TK50 RESISTOR	RL 0083.1297.00	RESISTA	MK2	

Für diese Unterlage behalten wir uns alle Rechte vor.

Kennz. Comp. No.	Benennung Designation	Sachnummer Stock No.	Hersteller Manufacturer	Bezeichnung Designation	enthalten in contained in
R526	RL 0,60W 10,0KOHM+-1%TK50 RESISTOR	RL 0083.1297.00	RESISTA	MK2	
R528	RL 0,60W 10,0KOHM+-1%TK50 RESISTOR	RL 0083.1297.00	RESISTA	MK2	
R529	RL 0,60W 10,0KOHM+-1%TK50 RESISTOR	RL 0083.1297.00	RESISTA	MK2	
R530	RL 0,60W 2,74KOHM+-1%TK50 RESISTOR	RL 0083.0926.00	RESISTA	MK2	
R531	RL 0,60W 475 OHM+-1%TK50 RESISTOR	RL 0083.0390.00	RESISTA	MK2	
R533	RL 0,60W 2,74KOHM+-1%TK50 RESISTOR	RL 0083.0926.00	RESISTA	MK2	
R534	RL 0,60W 1,1KOHM+-1%TK50 RESISTOR	RL 0082.2483.00	RESISTA	MK2	
R535	RL 0,60W 100KOHM+-1%TK50 RESISTOR	RL 0082.1764.00	RESISTA	MK2	
R536	RL 0,60W 100KOHM+-1%TK50 RESISTOR	RL 0082.1764.00	RESISTA	MK2	
R537	RL 0,60W 475 OHM+-1%TK50 RESISTOR	RL 0083.0390.00	RESISTA	MK2	
R538	RL 0,60W 475 OHM+-1%TK50 RESISTOR	RL 0083.0390.00	RESISTA	MK2	
V101	AD 1N4448 75V UDI DIODE	AD 0012.0700.00	PHILIPS_SE	1N4448 "	
V103	AK BCY59IX N 45V 200MA TRANSISTOR	AK 0010.5163.00	VALVO	BCY59IX	
V201	AM PN4118A N-D 40V JFET FET	0394.8749.00	SILICONIX	PN4118A	
V202	AM J270 P-D 30V JFET FET	0586.8516.00	NSC	J270	
V203	AM PN4118A N-D 40V JFET FET	0394.8749.00	SILICONIX	PN4118A	
V204	AM J270 P-D 30V JFET FET	0586.8516.00	NSC	J270	
V205 ..212	AM PN4118A N-D 40V JFET FET	0394.8749.00	SILICONIX	PN4118A	
V213	AD 1N4448 75V UDI DIODE	AD 0012.0700.00	PHILIPS_SE	1N4448 "	
V214	AM PN4118A N-D 40V JFET FET	0394.8749.00	SILICONIX	PN4118A	
V215	AE BZX79/B6V8 0,5W ZDI ZENER DIODE	AE 0586.9906.00	PHILIPS	BZX79B6V8	
V216	AD 1N4448 75V UDI DIODE	AD 0012.0700.00	PHILIPS_SE	1N4448 "	
V217	AD 1N4448 75V UDI DIODE	AD 0012.0700.00	PHILIPS_SE	1N4448 "	
V218	AM U404 N-D 50V DUALFET DUAL FET	0394.8703.00	SILICONIX	U404	
V219	AE BZX79/B5V6 0,5W ZDI ZENER DIODE	AE 0012.5254.00	VALVO	BZX79B5V6	
V222	AD 1N4448 75V UDI DIODE	AD 0012.0700.00	PHILIPS_SE	1N4448 "	
V223	AD 1N4448 75V UDI DIODE	AD 0012.0700.00	PHILIPS_SE	1N4448 "	
V301	AM PN4118A N-D 40V JFET FET	0394.8749.00	SILICONIX	PN4118A	
V302	AM J270 P-D 30V JFET FET	0586.8516.00	NSC	J270	
V303	AM PN4118A N-D 40V JFET FET	0394.8749.00	SILICONIX	PN4118A	
V304	AM J270 P-D 30V JFET FET	0586.8516.00	NSC	J270	
V305 ..312	AM PN4118A N-D 40V JFET FET	0394.8749.00	SILICONIX	PN4118A	
V313	AD 1N4448 75V UDI DIODE	AD 0012.0700.00	PHILIPS_SE	1N4448 "	
V314	AM PN4118A N-D 40V JFET FET	0394.8749.00	SILICONIX	PN4118A	
V315	AE BZX79/B6V8 0,5W ZDI ZENER DIODE	AE 0586.9906.00	PHILIPS	BZX79B6V8	
V316	AD 1N4448 75V UDI DIODE	AD 0012.0700.00	PHILIPS_SE	1N4448 "	
V317	AD 1N4448 75V UDI DIODE	AD 0012.0700.00	PHILIPS_SE	1N4448 "	
V318	AM U404 N-D 50V DUALFET DUAL FET	0394.8703.00	SILICONIX	U404	

Für diese Unterlage behalten wir uns alle Rechte vor.

Kennz. Comp. No.	Benennung Designation	Sachnummer Stock No.	Hersteller Manufacturer	Bezeichnung Designation	enthalten in contained in
V319	AE BZX79/B5V6 0,5W ZDI ZENER DIODE	AE 0012.5254.00	VALVO	BZX79B5V6	
V322	AD 1N4448 75V UDI DIODE	AD 0012.0700.00	PHILIPS_SE	1N4448 "	
V323	AD 1N4448 75V UDI DIODE	AD 0012.0700.00	PHILIPS_SE	1N4448 "	
V405	AD 1N4448 75V UDI DIODE	AD 0012.0700.00	PHILIPS_SE	1N4448 "	
V406	AD 1N4448 75V UDI DIODE	AD 0012.0700.00	PHILIPS_SE	1N4448 "	
V503	AD 1N4448 75V UDI DIODE	AD 0012.0700.00	PHILIPS_SE	1N4448 "	
V504	AM 3N163 P-E 40V MOSF MOS-FET	AM 0257.4859.00	INTERSIL	3N163 KURZSCHL.RING	
V505	AM PN4117A N-D 40V JFET FET	0349.3141.00	NSC	PN 4117 A	
V507	AM VN10KM N-E 60V MOSF MOS-FET	AM 0346.5820.00	SILICONIX	VN10KM	
V508	AK BCY59IX N 45V 200MA TRANSISTOR	AK 0010.5163.00	VALVO	BCY59IX	
W1	DY KABEL CABLE	0394.8778.00			
X1	FP BUCHSENLEISTE 16POL. CONNECTOR 16 WAY	FP 0645.6778.00	BERG_ELEKT	71600-016	0394.8778.00
X2	FP IC-LEITERPLATTENV.16P. CONNECTOR	0099.7754.00	ROBINSON	IDP-C163-T	0394.8778.00 F
X2	XX ENTHALTEN IN INCLUDED IN IN W1 / TO W1				
X101	FP STIFTLEISTE 36P.R2,54 PIN CONNECTOR 6-POLIG/5 PINS	FP 0242.3600.00	BINDER	742-11-0179-00-36	
X201	VL WIRE-WRAP PIN L=8,7 WIRE-WRAP PIN 2-POLIG/2 PINS	0088.4507.00	DUPONT CON	75403-001/75401-001	
X202	VL WIRE-WRAP PIN L=8,7 WIRE-WRAP PIN 2-POLIG/2 PINS	0088.4507.00	DUPONT CON	75403-001/75401-001	
X301	VL WIRE-WRAP PIN L=8,7 WIRE-WRAP PIN 2-POLIG/2 PINS	0088.4507.00	DUPONT CON	75403-001/75401-001	
X302	VL WIRE-WRAP PIN L=8,7 WIRE-WRAP PIN 2-POLIG/2 PINS	0088.4507.00	DUPONT CON	75403-001/75401-001	
X401	VL WIRE-WRAP PIN L=8,7 WIRE-WRAP PIN 1-POLIG/1 PIN	0088.4507.00	DUPONT CON	75403-001/75401-001	
X501	FP STIFTLEISTE 36P.R2,54 PIN CONNECTOR 9-POLIG/9 PINS	FP 0242.3600.00	BINDER	742-11-0179-00-36	
X502	VL WIRE-WRAP PIN L=8,7 WIRE-WRAP PIN 2-POLIG/2 PINS	0088.4507.00	DUPONT CON	75403-001/75401-001	
X503	FP KURZSCHLUSSBUCHSE SHORTING PLUG	FP 0342.1895.00	DUPONT CON	76264-101	
X505	VL WIRE-WRAP PIN L=8,7 WIRE-WRAP PIN 2 POLIG/2 PINS	0088.4507.00	DUPONT CON	75403-001/75401-001	
X506	VL WIRE-WRAP PIN L=8,7 WIRE-WRAP PIN 1-POLIG/1 PIN	0088.4507.00	DUPONT CON	75403-001/75401-001	
X507	FP STIFTLEISTE 36P.R2,54 PIN CONNECTOR 5-POLIG/5 PINS	FP 0242.3600.00	BINDER	742-11-0179-00-36	
X1A	FP STIFTLEISTE 36P.R2,54 PIN CONNECTOR 13-POLIG/13 PINS	FP 0242.3600.00	BINDER	742-11-0179-00-36	
X1B	FP STIFTLEISTE 36P.R2,54 PIN CONNECTOR 13-POLIG/13 PINS	FP 0242.3600.00	BINDER	742-11-0179-00-36	

Für diese Unterlage behalten wir uns alle Rechte vor.

Kennz. Comp. No.	Benennung Designation	Sachnummer Stock No.	Hersteller Manufacturer	Bezeichnung Designation	enthalten in contained in
-	XX ZUGEH.STROML. CIRC.DIAGR. 394.8932 S				
W1	DY KABEL CABLE	0394.8984.00			
X1	FP IND.BUCHSENLEISTE 12P. FEMALE MULTIP.CONNECTOR	0470.6830.00	BINDER	740 10-9810-00-12	
X2	FP IND.BUCHSENLEISTE 12P. FEMALE MULTIP.CONNECTOR	0470.6830.00	BINDER	740 10-9810-00-12	
X3	XX ENTHALTEN IN INCLUDED IN W1				

Für diese Unterlage behalten wir uns alle Rechte vor.

MENP1 490 3PUA	Äi	Datum Date	Schaltteilliste für Parts list for	Sachnummer Stock No.	Blatt-Nr. Page
ROHDE&SCHWARZ	02	16.01.98	ED BUCHSENPLATTE CONNECTOR BOARD	**0394.8932.01 SA**	1-

Kennz. Comp. No.	Benennung Designation	Sachnummer Stock No.	Hersteller Manufacturer	Bezeichnung Designation	enthalten in contained in
.	XX ZUGEH.STROML. CIRC.DIAGR. 394.9816 S				
C1	CC 2PF+-0,25PF NPO 0805 CHIP CAPACITOR	CC 0099.6812.00	VITRAMON	VJ0805A2R0CXA*L	0394.9868.01
R1	RL 0,5W47 OHM1% TK50 0204 METAL FILM RESISTOR	0394.9845.00	DRALORIC	SMA 0204 HF	0394.9868.01
R2	DT ABSCHLUSSWDST. 50 OHM TERMINATION 50 OHMS	0094.5924.00			
X1	ZM BNC-EINBAUBUCHSE	0394.9897.00			
X2A	MB FEDERBUCHSE SOCKET	0243.9147.00			
X2B	MB AUSSENLEITER 50 OHM	0394.9851.00			

Für diese Unterlage behalten wir uns alle Rechte vor.

1GPK 490 3PUA	Äl	Datum Date	Schaltteilliste für Parts list for	Sachnummer Stock No.	Blatt-Nr. Page
ROHDE&SCHWARZ	06	16.01.98	GG URV-Z50 50-OHM-ADAPTER	**0394.9816.01 SA**	1-

Kennz. Comp. No.	Benennung Designation	Sachnummer Stock No.	Hersteller Manufacturer	Bezeichnung Designation	enthalten in contained in
C1	CK 22ONF+-5%63VRD3,5H9MKT CAPACITOR	CK 0099.2952.00	ROEDERSTEI	MKT 1826-422-06-4	0395.0212.01
C2	CK 1ONF+-5%63V RD2,5H7MKT CAPACITOR	CK 0099.2869.00	ROEDERSTEI	MKT 1826-310-014W	0395.0212.01
C3	CK 22ONF+-5%63VRD3,5H9MKT CAPACITOR	CK 0099.2952.00	ROEDERSTEI	MKT 1826-422-06-4	0395.0212.01
C4	CK 22ONF+-5%63VRD3,5H9MKT CAPACITOR	CK 0099.2952.00	ROEDERSTEI	MKT 1826-422-06-4	0395.0212.01
C5	CE 1UF+-2O%63V RD9XM13RM5 ELECTROLYTIC CAPACITOR	0008.7485.00	PHILIPS_CO	2222 036 90382	0395.0212.01
C6	CE 1UF+-2O%63V RD9XM13RM5 ELECTROLYTIC CAPACITOR	0008.7485.00	PHILIPS_CO	2222 036 90382	0395.0212.01
C7	CE 4,7UF+-2O%63V RD9XH13 ELECTROLYTIC CAPACITOR	0008.7491.00	PHILIPS_CO	2222 036 90381	0395.0212.01
C8	CE 4,7UF+-2O%63V RD9XH13 ELECTROLYTIC CAPACITOR	0008.7491.00	PHILIPS_CO	2222 036 90381	0395.0212.01
C9	CE 47UF+-2O%63V RM5 ELECTROLYTIC CAPACITOR	0008.7440.00	PHILIPS_CO	2222 116 90112	0395.0212.01
C1O	CC 15OPF+-2%6X9N15O CAPACITOR	CC 0087.6735.00	PHILIPS_CO	2222 678 34151	0395.0212.01
D1	BL SN74LSO2N 4/2INP.NOR IC NOR GATE SN74LSO2N	0266.4658.00	TEXAS	SN74LSO2N	0395.0212.01
D2	BL SN74LS375N 2X2BIT-D-RG DUAL 2BIT-D-LATCH	0328.2281.00	TEXAS	SN74LS375N	0395.0212.01
D3	BL SN74LS373N 8BIT-D-REG. BL SN74LS373N 8BIT-D-REG.	0336.7543.00	TEXAS	SN74LS373N	0395.0212.01
D4	BJ DAC8OP-CPI-V 1X12B-DAC D/A-CONVERTER	BJ 0291.5131.00	BURR_BROWN	DAC8OP-CBI-V	0395.0212.01
D5	BL CD4O47BE MULTIVIBR. MULTIVIBRATOR	0349.2980.00	RCA	CD4047BE	0395.0212.01
N1	BO UA7815UC+15V1AO VREGL VOLTAGE REGULATOR	BO 0282.5403.00	NSC	LM-7815CT(LM340T15)	0395.0212.01
N2	BO UA7915UC-15V1AO VREGL VOLTAGE REGULATOR	BO 0282.5432.00	NSC	LM7915CT	0395.0212.01
R1	RL O,6OW 1,24KOHM+-1%TK5O RESISTOR	RL 0083.0661.00	RESISTA	MK2	0395.0212.01
R2	RL O,6OW3,92MOHM+-1%TK5O METALFILMRESISTOR	RL 0099.8238.00	RESISTA	MK2	0395.0212.01
R3	RL O,6OW 5,62KOHM+-1%TK5O RESISTOR	RL 0082.2190.00	RESISTA	MK2	0395.0212.01
R4	RL O,6OW 274 KOHM+-1%TK5O RESISTOR	RL 0083.2364.00	RESISTA	MK2	0395.0212.01
R5	RS O,5W1OOKOHM+-1O%1OX1OX CERMET POTENTIOMETER T	RS 0087.7583.00	BOURNS	3386F	0395.0212.01
R6	RL O,6OW 1O,O OHM+-1%TK5O RESISTOR	RL 0082.8852.00	RESISTA	MK2	0395.0212.01
R7	RL O,6OW 1O,OKOHM+-1%TK5O RESISTOR	RL 0083.1297.00	RESISTA	MK2	0395.0212.01
R8	RL O,6OW 274 KOHM+-1%TK5O RESISTOR	RL 0083.2364.00	RESISTA	MK2	0395.0212.01
R9	RS O,5W1OOKOHM+-1O%1OX1OX CERMET POTENTIOMETER T	RS 0087.7583.00	BOURNS	3386F	0395.0212.01
R1O	RL O,6OW 1KOHM+-1%TK5O RESISTOR	RL 0082.2160.00	RESISTA	MK2	0395.0212.01
R11	RL O,6OW 82,5KOHM+-1%TK5O RESISTOR	RL 0082.2302.00	RESISTA	MK2	0395.0212.01
V1 ..6	AD 1N4448 75V UDI DIODE	AD 0012.0700.00	PHILIPS_SE	1N4448 "	0395.0212.01
V7	AM VN1OKM N-E 6OV MOSF MOS-FET	AM 0346.5820.00	SILICONIX	VN1OKM	0395.0212.01
V8	AM VN1OKM N-E 6OV MOSF MOS-FET	AM 0346.5820.00	SILICONIX	VN1OKM	0395.0212.01
V9	AE BZX79B15 2% O.5W ZDI ZENER DIODE	AE 0008.7610.00	PHILIPS_SE	BZX79B15	0395.0212.01
W1	DY KABEL CABLE	0395.0241.00			0395.0212.01
W2	DV KABEL CABLE	0395.0258.00			
X1	XX ENTHALTEN IN INCLUDED IN W1				0395.0212.01

Für diese Unterlage behalten wir uns alle Rechte vor.

MENP1 490 3PUA	Äl	Datum Date	Schaltteilliste für Parts list for	Sachnummer Stock No.	Blatt-Nr. Page
ROHDE&SCHWARZ	17	16.01.98	GG URV5-B2 DC-AUSGANG URV5-B2 DC-OUTPUT	**0395.0112.01 SA**	1+

Kennz. Comp. No.	Benennung Designation	Sachnummer Stock No.	Hersteller Manufacturer	Bezeichnung Designation	enthalten in contained in
X10	XX ENTHALTEN IN INCLUDED IN W2				
X25	XX ENTHALTEN IN INCLUDED IN W1				0395.0212.01
X2A	FP STIFTLEISTE 36P.R2,54 PIN CONNECTOR 2-POLIG/2 PINS	FP 0242.3600.00	BINDER	742-11-0179-00-36	0395.0212.01
X2B	XX ENTHALTEN IN INCLUDED IN W2				
X3A	FP STIFTLEISTE 36P.R2,54 PIN CONNECTOR 2-POLIG/2 PINS	FP 0242.3600.00	BINDER	742-11-0179-00-36	0395.0212.01
X3B	FP KURZSCHLUSSBUCHSE SHORTING PLUG	FP 0342.1895.00	DUPONT CON	76264-101	0395.0212.01
X4A	FP STIFTLEISTE 36P.R2,54 PIN CONNECTOR 2-POLIG/2 PINS	FP 0242.3600.00	BINDER	742-11-0179-00-36	0395.0212.01
X4B	FP KURZSCHLUSSBUCHSE SHORTING PLUG	FP 0342.1895.00	DUPONT CON	76264-101	0395.0212.01
Z1	LU WANDLERTRANSFORMATOR TRANSFORMER	0395.0235.00			0395.0212.01

Für diese Unterlage behalten wir uns alle Rechte vor.

Kennz. Comp. No.	Benennung Designation	Sachnummer Stock No.	Hersteller Manufacturer	Bezeichnung Designation	enthalten in contained in
.	XX ZUGEH.STROML. CIRC.DIAGR. 395.0512 S				
C10	CC 100NF+-10% 50V5K1200 C CAPACITOR NUR VAR/ONLY MOD: 02 03 04	0082.3473.00	PHILIPS_CO	2222 594 16641	0395.2915.01
D10	BL MM74HC393N 2X4B.B.CTR DUAL 4-BIT BINARY COUNTER NUR VAR/ONLY MOD: 02 03	0395.2950.00	PHILIPS_SE	(PC)74HC393N(P)	0395.2915.01
D10	BL MM74HC393N 2X4B.B.CTR DUAL 4-BIT BINARY COUNTER NUR VAR/ONLY MOD: 04	0395.2950.00	PHILIPS_SE	(PC)74HC393N(P)	0395.2915.01
D11	BL MM74HC393N 2X4B.B.CTR DUAL 4-BIT BINARY COUNTER NUR VAR/ONLY MOD: 02 03	0395.2950.00	PHILIPS_SE	(PC)74HC393N(P)	0395.2915.01
D11	BL MM74HC393N 2X4B.B.CTR DUAL 4-BIT BINARY COUNTER NUR VAR/ONLY MOD: 04	0395.2950.00	PHILIPS_SE	(PC)74HC393N(P)	0395.2915.01
D12	BC D2732A-25 PROGR.1 EPROM	0395.0812.00			
D13	BL MM74HC151N 8CH.DIGMUX 8CHANNEL DIGITAL MUX NUR VAR/ONLY MOD: 02 03	0395.2967.00	PHILIPS_SE	(PC)74HC151N(P)	0395.2915.01
D13	BL SN74LS151N MULTIPLEXER IC MULTIPLEXER SN74LS151N NUR VAR/ONLY MOD: 04	0266.7963.00	TEXAS	SN74LS151N	0395.2915.01
R10	RL 0,40W 1,00KOHM+-1%TK50 RESISTOR NUR VAR/ONLY MOD: 02 03	RL 0092.1444.00	ROEDERSTEI	MK1	0395.2915.01
R10	RL 0-OHM-WIDERST. 0204 0-OHM RESISTOR NUR VAR/ONLY MOD: 04	RL 0069.0000.00	DRALORIC	OMA 0204	0395.2915.01
R11	RL 0,40W 1,00KOHM+-1%TK50 RESISTOR NUR VAR/ONLY MOD: 02 03	RL 0092.1444.00	ROEDERSTEI	MK1	0395.2915.01
R11	RL 0,40W 10,0KOHM+-1%TK50 RESISTOR NUR VAR/ONLY MOD: 04	RL 0092.1567.00	ROEDERSTEI	MK1	0395.2915.01
R12	RL 0,40W 1,00KOHM+-1%TK50 RESISTOR NUR VAR/ONLY MOD: 02 03	RL 0092.1444.00	ROEDERSTEI	MK1	0395.2915.01
R12	RL 0,40W 10,0KOHM+-1%TK50 RESISTOR NUR VAR/ONLY MOD: 04	RL 0092.1567.00	ROEDERSTEI	MK1	0395.2915.01
R13	RL 0,40W 1,00KOHM+-1%TK50 RESISTOR NUR VAR/ONLY MOD: 02 03	RL 0092.1444.00	ROEDERSTEI	MK1	0395.2915.01
R14	RL 0-OHM-WIDERST. 0204 0-OHM RESISTOR NUR VAR/ONLY MOD: 02 03 04	RL 0069.0000.00	DRALORIC	OMA 0204	0395.2915.01
V10	AE BZX79/B5V6 0,5W ZDI ZENER DIODE NUR VAR/ONLY MOD: 02 03	AE 0012.5254.00	VALVO	BZX79B5V6	0395.2915.01
X10	FP IND.STECKERLEISTE 12P. CONNECTOR NUR VAR/ONLY MOD: 02 03 04 05	0516.0200.00	BINDER	10-9839-00-12	0395.2915.01
X11	VL LOETOESE 6,9 X 0,9 SOLDERING PIN NUR VAR/ONLY MOD: 02 03	VL 0082.5253.00	DYTRONA	0082.5253	0395.2915.01
X12	VL LOETOESE 6,9 X 0,9 SOLDERING PIN NUR VAR/ONLY MOD: 02 04 05	VL 0082.5253.00	DYTRONA	0082.5253	0395.2915.01
X13	VL LOETOESE 6,9 X 0,9 SOLDERING PIN NUR VAR/ONLY MOD: 02 04 05	VL 0082.5253.00	DYTRONA	0082.5253	0395.2915.01
X14	VL LOETOESE 6,9 X 0,9 SOLDERING PIN NUR VAR/ONLY MOD: 04 05	VL 0082.5253.00	DYTRONA	0082.5253	0395.2915.01
X15	VL LOETOESE 6,9 X 0,9 SOLDERING PIN NUR VAR/ONLY MOD: 02	VL 0082.5253.00	DYTRONA	0082.5253	0395.2915.01

Für diese Unterlage behalten wir uns alle Rechte vor.

Kennz. Comp. No.	Benennung Designation	Sachnummer Stock No.	Hersteller Manufacturer	Bezeichnung Designation	enthalten in contained in
X16	VL LOETOESE 6,9 X 0,9 SOLDERING PIN NUR VAR/ONLY MOD: 02 04 05	VL 0082.5253.00	DYTRONA	0082.5253	0395.2915.01
X17	VL LOETOESE 6,9 X 0,9 SOLDERING PIN NUR VAR/ONLY MOD: 02 03 04 05	VL 0082.5253.00	DYTRONA	0082.5253	0395.2915.01
X18	VL LOETOESE 6,9 X 0,9 SOLDERING PIN NUR VAR/ONLY MOD: 04 05	VL 0082.5253.00	DYTRONA	0082.5253	0395.2915.01
X19	FP STIFTL.WIN 36P.R2,54 ANGLE PIN CONNECTOR NUR VAR/ONLY MOD: 03 1-POLIG/1 PIN	FP 0243.3578.00	BINDER	742-5-11-0187-00-36	0395.2915.01
X20	VL LOETOESE 6,9 X 0,9 SOLDERING PIN NUR VAR/ONLY MOD: 04	VL 0082.5253.00	DYTRONA	0082.5253	0395.2915.01
X21	VL STECKLOETOESE 7,5X1,1 PLUG-IN SOLDERING LUG NUR VAR/ONLY MOD: 05	VL 0078.2747.00	-	R&S-ZCHNG.078.2747	0395.2915.01
X22	VL STECKLOETOESE 7,5X1,1 PLUG-IN SOLDERING LUG NUR VAR/ONLY MOD: 05	VL 0078.2747.00	-	R&S-ZCHNG.078.2747	0395.2915.01
X23	VL STECKLOETOESE 7,5X1,1 PLUG-IN SOLDERING LUG NUR VAR/ONLY MOD: 05	VL 0078.2747.00	-	R&S-ZCHNG.078.2747	0395.2915.01

Für diese Unterlage behalten wir uns alle Rechte vor.

Kennz. Comp. No.	Benennung Designation	Sachnummer Stock No.	Hersteller Manufacturer	Bezeichnung Designation	enthalten in contained in
.	XX VARIANTENERKLAERUNG IDENTIFICATION OF MODELS VAR 02 = NEUE AUSF. AB MITTE 1997 MOD 02 = NEW MODEL FROM TIME SUMMER 1997 VAR 04 = EMBARGO-AUSFHRG. MOD 04 = EMBARGO MODEL VAR 05 = NEUE AUSF. MIT ANSCHLUSSKABEL 5M LANG, AB MITTE 1997 MOD 05 = NEW MODEL WITH CONNECTING CABLE 5M LENGTH, FROM TIME SUMMER 1997 VAR 55 = 50 OHM AUSF. M. N-STECKER UND N-BUCHSE MOD 55 = 50 OHM-MODEL WITH N-PLUG+ N-SOCKET VAR 56 = 50 OHM AUSF. M.N-ST+N-BU.M. ANSCHL.KABEL 5M LG. MOD 56 = 50 OHM MODEL WITH N-PLUG+ N-SOCKET CONNECTING CABLE,5M LENGTH				
.	XX ZUGEH.STROML. CIRC.DIAGR. 395.1019 S				
A1	ED ANSCHLUSSPLATTE NUR VAR/ONLY MOD: 02 05 HIERZU STROML.395.1431.01 SEE CIRC.DIAGR.395.1431.01	0395.1431.02			
A2	ED DATENSPEICHER III NUR VAR/ONLY MOD: 02 05 HIERZU STROML.395.3063.01S SEE CIRC.DIAG.395.3063.01S	0395.3063.02			
C1	CC 10NF+-10% X5R 0805 CAPACITOR	CC 0093.2115.00	PHILIPS_CO	2222 580 15636	0395.1419.01
C1	CC 1NF+-1% 50V NPO 1206 SMD CERAMIC CAPACITOR NUR VAR/ONLY MOD: 24	CC 0007.7398.00	PHILIPS_CO	2222 863 *8102	0395.1319.01
C3	CC 100NF+-10%50V X7R 1206 CERAMIC CHIP CAPACITOR NUR VAR/ONLY MOD: 23	CC 0007.5237.00	PHILIPS_CO	2238 581 55649	0395.1319.01
C3	CC 2X1NF+-20%50V W5R8X4X2 KOAXIAL CAPACITOR	0395.1402.00	ERIE	D012-X7R-50-102M	0395.1148.01
C4	CC 1NF+-1% 50V NPO 1206 SMD CERAMIC CAPACITOR	CC 0007.7398.00	PHILIPS_CO	2222 863 *8102	0395.1319.01
C10	CC 100NF+-10% 50V5K1200 C CAPACITOR NUR VAR/ONLY MOD: 02 03 04	0082.3473.00	PHILIPS_CO	2222 594 16641	0395.2915.01
D10	BL MM74HC393N 2X4B.B.CTR DUAL 4-BIT BINARY COUNTER NUR VAR/ONLY MOD: 02 03	0395.2950.00	PHILIPS_SE	(PC)74HC393N(P)	0395.2915.01
D10	BL MM74HC393N 2X4B.B.CTR DUAL 4-BIT BINARY COUNTER NUR VAR/ONLY MOD: 04	0395.2950.00	PHILIPS_SE	(PC)74HC393N(P)	0395.2915.01
D11	BL MM74HC393N 2X4B.B.CTR DUAL 4-BIT BINARY COUNTER NUR VAR/ONLY MOD: 02 03	0395.2950.00	PHILIPS_SE	(PC)74HC393N(P)	0395.2915.01
D11	BL MM74HC393N 2X4B.B.CTR DUAL 4-BIT BINARY COUNTER NUR VAR/ONLY MOD: 04	0395.2950.00	PHILIPS_SE	(PC)74HC393N(P)	0395.2915.01
D12	HS D 2732A - 25 NUR VAR/ONLY MOD: 55 56	0395.1490.00			
D12	.. D2732A-25 (EMBARGO) NUR VAR/ONLY MOD: 04	0395.1502.00			

Für diese Unterlage behalten wir uns alle Rechte vor.

Kennz. Comp. No.	Benennung Designation	Sachnummer Stock No.	Hersteller Manufacturer	Bezeichnung Designation	enthalten in contained in
D13	BL MM74HC151N 8CH.DIGMUX 8CHANNEL DIGITAL MUX NUR VAR/ONLY MOD: 02 03	0395.2967.00	PHILIPS_SE	(PC)74HC151N(P)	0395.2915.01
D13	BL SN74LS151N MULTIPLEXER IC MULTIPLEXER SN74LS151N NUR VAR/ONLY MOD: 04	0266.7963.00	TEXAS	SN74LS151N	0395.2915.01
R1	RL 0,5W47 OHM1% TK50 0204 METAL FILM RESISTOR	0394.9845.00	DRALORIC	SMA 0204 HF	0395.1419.01
R1	RG 0-OHM WIDERSTAND-CHIP RESISTOR CHIP 0-OHM NUR VAR/ONLY MOD: 02 22 23	RG 0007.5108.00	DRALORIC	CR 1206	0395.1319.01
R1	RG 22,1KOHM+-1%TK100 1206 RESISTOR CHIP NUR VAR/ONLY MOD: 24	RG 0007.5872.00	ROEDERSTEI	D25	0395.1319.01
R2	RG 0-OHM WIDERSTAND-CHIP RESISTOR CHIP 0-OHM	RG 0007.5108.00	DRALORIC	CR 1206	0395.1319.01
R3	RG 0-OHM WIDERSTAND-CHIP RESISTOR CHIP 0-OHM NUR VAR/ONLY MOD: 22	RG 0007.5108.00	DRALORIC	CR 1206	0395.1319.01
R3	RG 1,82KOHM+-1%TK100 1206 RESISTOR CHIP NUR VAR/ONLY MOD: 23	RG 0007.5720.00	ROEDERSTEI	D25	0395.1319.01
R3	RL 0,4OW 10,OKOHM+-1%TK50 RESISTOR	RL 0092.1567.00	ROEDERSTEI	MK1	0395.1148.01
R4	RL 0,4OW 10,OKOHM+-1%TK50 RESISTOR	RL 0092.1567.00	ROEDERSTEI	MK1	0395.1148.01
R10	RL 0,4OW 1,OOKOHM+-1%TK50 RESISTOR NUR VAR/ONLY MOD: 02 03	RL 0092.1444.00	ROEDERSTEI	MK1	0395.2915.01
R10	RL 0-OHM-WIDERST. 0204 0-OHM RESISTOR NUR VAR/ONLY MOD: 04	RL 0069.0000.00	DRALORIC	OMA 0204	0395.2915.01
R11	RL 0,4OW 1,OOKOHM+-1%TK50 RESISTOR NUR VAR/ONLY MOD: 02 03	RL 0092.1444.00	ROEDERSTEI	MK1	0395.2915.01
R11	RL 0,4OW 10,OKOHM+-1%TK50 RESISTOR NUR VAR/ONLY MOD: 04	RL 0092.1567.00	ROEDERSTEI	MK1	0395.2915.01
R12	RL 0,4OW 1,OOKOHM+-1%TK50 RESISTOR NUR VAR/ONLY MOD: 02 03	RL 0092.1444.00	ROEDERSTEI	MK1	0395.2915.01
R12	RL 0,4OW 10,OKOHM+-1%TK50 RESISTOR NUR VAR/ONLY MOD: 04	RL 0092.1567.00	ROEDERSTEI	MK1	0395.2915.01
R13	RL 0,4OW 1,OOKOHM+-1%TK50 RESISTOR NUR VAR/ONLY MOD: 02 03	RL 0092.1444.00	ROEDERSTEI	MK1	0395.2915.01
R14	RL 0-OHM-WIDERST. 0204 0-OHM RESISTOR NUR VAR/ONLY MOD: 02 03 04	RL 0069.0000.00	DRALORIC	OMA 0204	0395.2915.01
V1	ZE DIODENPAAR2X BAT16-046 PAIR OF DIODES (CALIB.!!) NUR VAR/ONLY MOD: 04 55 56 V2 ENTH. IN V1 V2 INCL. IN V1	0395.2873.00			
V3	BJ LM335H TEMP.SENSOR PRECISION TEMP.SENSOR	0395.2867.00	NSC	LM335H	0395.1319.01
V10	AE BZX79/B5V6 0,5W ZDI ZENER DIODE NUR VAR/ONLY MOD: 02 03	AE 0012.5254.00	VALVO	BZX79B5V6	0395.2915.01
W1	DX KABEL CABLE NUR VAR/ONLY MOD: 02	0395.1090.02			
W1	DX KABEL NUR VAR/ONLY MOD: 05	0395.1090.05			
X1 ..8	VL STECKLOETOESE 7,5X1,1 PLUG-IN SOLDERING LUG	VL 0078.2747.00	-	R&S-ZCHNG.078.2747	0395.1319.01
X9	VL STECKLOETOESE 7,5X1,1 PLUG-IN SOLDERING LUG NUR VAR/ONLY MOD: 22 23	VL 0078.2747.00	-	R&S-ZCHNG.078.2747	0395.1319.01
X10	VL STECKLOETOESE 7,5X1,1 PLUG-IN SOLDERING LUG NUR VAR/ONLY MOD: 22 23	VL 0078.2747.00	-	R&S-ZCHNG.078.2747	0395.1319.01

Für diese Unterlage behalten wir uns alle Rechte vor.

1GPK 490 3PUA	Äi	Datum Date	Schaltteilliste für Parts list for	Sachnummer Stock No.	Blatt-Nr. Page
ROHDE&SCHWARZ	26	16.01.98	URV5-Z2 10V-DURCHG.-KOPF URV5-Z2 10V-INSERT.UNIT	**0395.1019.01 SA**	2+

Kennz. Comp. No.	Benennung Designation	Sachnummer Stock No.	Hersteller Manufacturer	Bezeichnung Designation	enthalten in contained in
X10	FP IND.STECKERLEISTE 12P. CONNECTOR NUR VAR/ONLY MOD: 02 03 04 05	0516.0200.00	BINDER	10-9839-00-12	0395.2915.01
X11	VL LOETOESE 6,9 X 0,9 SOLDERING PIN NUR VAR/ONLY MOD: 02 03	VL 0082.5253.00	DYTRONA	0082.5253	0395.2915.01
X12	VL LOETOESE 6,9 X 0,9 SOLDERING PIN NUR VAR/ONLY MOD: 02 04 05	VL 0082.5253.00	DYTRONA	0082.5253	0395.2915.01
X13	VL LOETOESE 6,9 X 0,9 SOLDERING PIN NUR VAR/ONLY MOD: 02 04 05	VL 0082.5253.00	DYTRONA	0082.5253	0395.2915.01
X14	VL LOETOESE 6,9 X 0,9 SOLDERING PIN NUR VAR/ONLY MOD: 04 05	VL 0082.5253.00	DYTRONA	0082.5253	0395.2915.01
X15	VL LOETOESE 6,9 X 0,9 SOLDERING PIN NUR VAR/ONLY MOD: 02	VL 0082.5253.00	DYTRONA	0082.5253	0395.2915.01
X16	VL LOETOESE 6,9 X 0,9 SOLDERING PIN NUR VAR/ONLY MOD: 02 04 05	VL 0082.5253.00	DYTRONA	0082.5253	0395.2915.01
X17	VL LOETOESE 6,9 X 0,9 SOLDERING PIN NUR VAR/ONLY MOD: 02 03 04 05	VL 0082.5253.00	DYTRONA	0082.5253	0395.2915.01
X18	VL LOETOESE 6,9 X 0,9 SOLDERING PIN NUR VAR/ONLY MOD: 04 05	VL 0082.5253.00	DYTRONA	0082.5253	0395.2915.01
X19	FP STIFTL.WIN 36P.R2,54 ANGLE PIN CONNECTOR NUR VAR/ONLY MOD: 03 1-POLIG/1 PIN	FP 0243.3578.00	BINDER	742-5-11-0187-00-36	0395.2915.01
X20	VL LOETOESE 6,9 X 0,9 SOLDERING PIN NUR VAR/ONLY MOD: 04	VL 0082.5253.00	DYTRONA	0082.5253	0395.2915.01
X21	VL STECKLOETOESE 7,5X1,1 PLUG-IN SOLDERING LUG NUR VAR/ONLY MOD: 05	VL 0078.2747.00	-	R&S-ZCHNG.078.2747	0395.2915.01
X21	FJ UMR.BU. DEZ.B/N,NIROST	0395.2050.00			
X22	VL STECKLOETOESE 7,5X1,1 PLUG-IN SOLDERING LUG NUR VAR/ONLY MOD: 05	VL 0078.2747.00	-	R&S-ZCHNG.078.2747	0395.2915.01
X22	FJ PRAEZ.N-ST,UMR.NIROST	0395.2021.00			
X23	VL STECKLOETOESE 7,5X1,1 PLUG-IN SOLDERING LUG NUR VAR/ONLY MOD: 05	VL 0078.2747.00	-	R&S-ZCHNG.078.2747	0395.2915.01

Für diese Unterlage behalten wir uns alle Rechte vor.

Kennz. Comp. No.	Benennung Designation	Sachnummer Stock No.	Hersteller Manufacturer	Bezeichnung Designation	enthalten in contained in
R1	DT ABSCHLUSSWDST. 75 OHM TERMINATION 75 OHMS DUENNSCHICHT-SPEZ.TEIL	0094.6050.00			0243.9153.00
X1	FK UEBERGANG UNI 9 2,5/6 ADAPTER	0243.9260.00	WANDEL_&_G	S344 0000-2692.005	0243.9218.00
X2	FK UEBERGANG UNI9 1,6/5,6 ADAPTER	0243.9276.00	WANDEL_&_G	S346 0000-2690.007	0243.9218.00
X3	FK UEBERGANG UNI9/BNC ADAPTER	0243.9282.00	WANDEL_&_G	S825 00002691.815	0243.9218.00
X4	FK EINBAUBUCHSE UNI9 H CONNECTOR	0243.9253.00	WANDEL_&_G	0000-1686.009/5	
X5A	MB FEDERBUCHSE SOCKET	0243.9147.00			
X5B	MB AUSSENLEITER	0243.9130.00			

Für diese Unterlage behalten
wir uns alle Rechte vor.

1GPK 490 3PUA	Äl	Datum Date	Schaltteilliste für Parts list for	Sachnummer Stock No.	Blatt-Nr. Page
ROHDE&SCHWARZ	01	16.01.98	GG URV-Z3 75 OHM ADAPTER	**0243.9118.01 SA**	1-

095.0026-0693

Kennz. Comp. No.	Benennung Designation	Sachnummer Stock No.	Hersteller Manufacturer	Bezeichnung Designation	enthalten in contained in
.	XX VARIANTENERKLAERUNG IDENTIFICATION OF MODELS VAR 02 = NEUE 50 OHM AUSF. AB MITTE 1997 MOD 02 = NEW 50 OHM MODEL FROM TIME SUMMER 1997 VAR 04 = EMBARGO AUSFUEHRG MOD 04 = EMBARGO-MODEL VAR 05 = NEUE 50 OHM AUSF. AB MITTE 1997 MOD 05 = NEW 50 OHM MODEL FROM TIME SUMMER 1997 VAR 55 = 50 OHM AUSF. MIT N-STECKER UND N-BUCHSE MOD 55 = 50 OHM MODEL WITH N-PLUG+N-SOCKET VAR 56 = 50 OHM AUSF. MIT MIT N-STECKER UND N-BUCHSE UND ANSCHL.-KABEL 5M LANG MOD 56 = 50 OHM MODEL WITH N-PLUG+N-SOCKET+ CONNECTING CABLE 5M LENGTH VAR 75 = 75 OHM-AUSF. M.N-STECKER UND N-BUCHSE MOD 75 = 75 OHM MODEL WITH N-PLUG+N-SOCKET VAR 76 = 75 OHM-AUSF.M. N-ST.+N-BU UND ANSCHL.KABEL 5M.LANG MOD 76 = 75 OHM MODEL WITH N-PLUG+N-SOCKET+ CONNECTING,CABLE, 5M LENGTH				
..	XX ZUGEH.STROML. CIRC.DIAGR. 395.1619 S				
A1	ED ANSCHLUSSPLATTE BASIC MODEL NUR VAR/ONLY MOD: 02 05 HIERZU STROML.395.1860.01S SEE CIRC.DIAG.395.1860.01S	0395.1860.02			
A2	ED DATENSPEICHER III NUR VAR/ONLY MOD: 02 05 HIERZU STROML.395.3063.01S SEE CIRC.DIAG.395.3063.01S	0395.3063.02			
C1	CC 1NF+-1% 50V NPO 1206 SMD CERAMIC CAPACITOR NUR VAR/ONLY MOD: 24	CC 0007.7398.00	PHILIPS_CO	2222 863 *8102	0395.1319.01
C3	CC 100NF+-10%50V X7R 1206 CERAMIC CHIP CAPACITOR NUR VAR/ONLY MOD: 23	CC 0007.5237.00	PHILIPS_CO	2238 581 55649	0395.1319.01
C3	CC 2X1NF+-20%50V W5R8X4X2 KOAXIAL CAPACITOR	0395.1402.00	ERIE	D012-X7R-50-102M	0395.1783.01
C4	CC 1NF+-1% 50V NPO 1206 SMD CERAMIC CAPACITOR	CC 0007.7398.00	PHILIPS_CO	2222 863 *8102	0395.1319.01
C10	CC 100NF+-10% 50V5K1200 C CAPACITOR NUR VAR/ONLY MOD: 02 03 04	0082.3473.00	PHILIPS_CO	2222 594 16641	0395.2915.01
D10	BL MM74HC393N 2X4B.B.CTR DUAL 4-BIT BINARY COUNTER NUR VAR/ONLY MOD: 02 03	0395.2950.00	PHILIPS_SE	(PC)74HC393N(P)	0395.2915.01
D10	BL MM74HC393N 2X4B.B.CTR DUAL 4-BIT BINARY COUNTER NUR VAR/ONLY MOD: 04	0395.2950.00	PHILIPS_SE	(PC)74HC393N(P)	0395.2915.01
D11	BL MM74HC393N 2X4B.B.CTR DUAL 4-BIT BINARY COUNTER NUR VAR/ONLY MOD: 02 03	0395.2950.00	PHILIPS_SE	(PC)74HC393N(P)	0395.2915.01

Für diese Unterlage behalten wir uns alle Rechte vor.

Kennz. Comp. No.	Benennung Designation	Sachnummer Stock No.	Hersteller Manufacturer	Bezeichnung Designation	enthalten in contained in
D11	BL MM74HC393N 2X4B.B.CTR DUAL 4-BIT BINARY COUNTER NUR VAR/ONLY MOD: 04	0395.2950.00	PHILIPS_SE	(PC)74HC393N(P)	0395.2915.01
D12	HS BC 2732 PROGR.1 BC 2732 PROGR.1 NUR VAR/ONLY MOD: 55 56 75 76	0395.1890.00			
D12	BC 2732 PROGR.1(EMBARGO) EPROM NUR VAR/ONLY MOD: 04	0395.1902.00			
D13	BL MM74HC151N 8CH.DIGMUX 8CHANNEL DIGITAL MUX NUR VAR/ONLY MOD: 02 03	0395.2967.00	PHILIPS_SE	(PC)74HC151N(P)	0395.2915.01
D13	BL SN74LS151N MULTIPLEXER IC MULTIPLEXER SN74LS151N NUR VAR/ONLY MOD: 04	0266.7963.00	TEXAS	SN74LS151N	0395.2915.01
R1	RL 0,5W47 OHM1% TK50 0204 METAL FILM RESISTOR	0394.9845.00	DRALORIC	SMA 0204 HF	0395.1819.01
R1	RG 0-OHM WIDERSTAND-CHIP RESISTOR CHIP 0-OHM NUR VAR/ONLY MOD: 02 22 23	RG 0007.5108.00	DRALORIC	CR 1206	0395.1319.01
R1	RG 22,1KOHM+-1%TK100 1206 RESISTOR CHIP NUR VAR/ONLY MOD: 24	RG 0007.5872.00	ROEDERSTEI	D25	0395.1319.01
R2	RG 0-OHM WIDERSTAND-CHIP RESISTOR CHIP 0-OHM	RG 0007.5108.00	DRALORIC	CR 1206	0395.1319.01
R3	RG 0-OHM WIDERSTAND-CHIP RESISTOR CHIP 0-OHM NUR VAR/ONLY MOD: 22	RG 0007.5108.00	DRALORIC	CR 1206	0395.1319.01
R3	RG 1,82KOHM+-1%TK100 1206 RESISTOR CHIP NUR VAR/ONLY MOD: 23	RG 0007.5720.00	ROEDERSTEI	D25	0395.1319.01
R3	RL 0,4OW 10,0KOHM+-1%TK50 RESISTOR	RL 0092.1567.00	ROEDERSTEI	MK1	0395.1783.01
R4	RL 0,4OW 10,0KOHM+-1%TK50 RESISTOR	RL 0092.1567.00	ROEDERSTEI	MK1	0395.1783.01
R10	RL 0,4OW 1,00KOHM+-1%TK50 RESISTOR NUR VAR/ONLY MOD: 02 03	RL 0092.1444.00	ROEDERSTEI	MK1	0395.2915.01
R10	RL 0-OHM-WIDERST. 0204 0-OHM RESISTOR NUR VAR/ONLY MOD: 04	RL 0069.0000.00	DRALORIC	OMA 0204	0395.2915.01
R11	RL 0,4OW 1,00KOHM+-1%TK50 RESISTOR NUR VAR/ONLY MOD: 02 03	RL 0092.1444.00	ROEDERSTEI	MK1	0395.2915.01
R11	RL 0,4OW 10,0KOHM+-1%TK50 RESISTOR NUR VAR/ONLY MOD: 04	RL 0092.1567.00	ROEDERSTEI	MK1	0395.2915.01
R12	RL 0,4OW 1,00KOHM+-1%TK50 RESISTOR NUR VAR/ONLY MOD: 02 03	RL 0092.1444.00	ROEDERSTEI	MK1	0395.2915.01
R12	RL 0,4OW 10,0KOHM+-1%TK50 RESISTOR NUR VAR/ONLY MOD: 04	RL 0092.1567.00	ROEDERSTEI	MK1	0395.2915.01
R13	RL 0,4OW 1,00KOHM+-1%TK50 RESISTOR NUR VAR/ONLY MOD: 02 03	RL 0092.1444.00	ROEDERSTEI	MK1	0395.2915.01
R14	RL 0-OHM-WIDERST. 0204 0-OHM RESISTOR NUR VAR/ONLY MOD: 02 03 04	RL 0069.0000.00	DRALORIC	OMA 0204	0395.2915.01
V1	ZE DIODENPAAR2X BAT16-046 PAIR OF DIODES (CALIB.!!) NUR VAR/ONLY MOD: 04 55 56 75 76 V2 ENTH. IN V1 V2 INCL. IN V1	0395.2873.00			
V3	BJ LM335H TEMP.SENSOR PRECISION TEMP.SENSOR	0395.2867.00	NSC	LM335H	0395.1319.01
V10	AE BZX79/B5V6 0,5W ZDI ZENER DIODE NUR VAR/ONLY MOD: 02 03	AE 0012.5254.00	VALVO	BZX79B5V6	0395.2915.01
W1	DX KABEL CABLE NUR VAR/ONLY MOD: 02	0395.1090.02			

Für diese Unterlage behalten wir uns alle Rechte vor.

Kennz. Comp. No.	Benennung Designation	Sachnummer Stock No.	Hersteller Manufacturer	Bezeichnung Designation	enthalten in contained in
W1	DX KABEL NUR VAR/ONLY MOD: 05	0395.1090.05			
X1 ..8	VL STECKLOETOESE 7,5X1,1 PLUG-IN SOLDERING LUG	VL 0078.2747.00	-	R&S-ZCHNG.078.2747	0395.1319.01
X9	VL STECKLOETOESE 7,5X1,1 PLUG-IN SOLDERING LUG NUR VAR/ONLY MOD: 22 23	VL 0078.2747.00	-	R&S-ZCHNG.078.2747	0395.1319.01
X10	VL STECKLOETOESE 7,5X1,1 PLUG-IN SOLDERING LUG NUR VAR/ONLY MOD: 22 23	VL 0078.2747.00	-	R&S-ZCHNG.078.2747	0395.1319.01
X10	FP IND.STECKERLEISTE 12P. CONNECTOR NUR VAR/ONLY MOD: 02 03 04 05	0516.0200.00	BINDER	10-9839-00-12	0395.2915.01
X11	VL LOETOESE 6,9 X 0,9 SOLDERING PIN NUR VAR/ONLY MOD: 02 03	VL 0082.5253.00	DYTRONA	0082.5253	0395.2915.01
X12	VL LOETOESE 6,9 X 0,9 SOLDERING PIN NUR VAR/ONLY MOD: 02 04 05	VL 0082.5253.00	DYTRONA	0082.5253	0395.2915.01
X13	VL LOETOESE 6,9 X 0,9 SOLDERING PIN NUR VAR/ONLY MOD: 02 04 05	VL 0082.5253.00	DYTRONA	0082.5253	0395.2915.01
X14	VL LOETOESE 6,9 X 0,9 SOLDERING PIN NUR VAR/ONLY MOD: 04 05	VL 0082.5253.00	DYTRONA	0082.5253	0395.2915.01
X15	VL LOETOESE 6,9 X 0,9 SOLDERING PIN NUR VAR/ONLY MOD: 02	VL 0082.5253.00	DYTRONA	0082.5253	0395.2915.01
X16	VL LOETOESE 6,9 X 0,9 SOLDERING PIN NUR VAR/ONLY MOD: 02 04 05	VL 0082.5253.00	DYTRONA	0082.5253	0395.2915.01
X17	VL LOETOESE 6,9 X 0,9 SOLDERING PIN NUR VAR/ONLY MOD: 02 03 04 05	VL 0082.5253.00	DYTRONA	0082.5253	0395.2915.01
X18	VL LOETOESE 6,9 X 0,9 SOLDERING PIN NUR VAR/ONLY MOD: 04 05	VL 0082.5253.00	DYTRONA	0082.5253	0395.2915.01
X19	FP STIFTL.WIN 36P.R2,54 ANGLE PIN CONNECTOR NUR VAR/ONLY MOD: 03 1-POLIG/1 PIN	FP 0243.3578.00	BINDER	742-5-11-0187-00-36	0395.2915.01
X20	VL LOETOESE 6,9 X 0,9 SOLDERING PIN NUR VAR/ONLY MOD: 04	VL 0082.5253.00	DYTRONA	0082.5253	0395.2915.01
X21	VL STECKLOETOESE 7,5X1,1 PLUG-IN SOLDERING LUG NUR VAR/ONLY MOD: 05	VL 0078.2747.00	-	R&S-ZCHNG.078.2747	0395.2915.01
X21	FJ UMR.BU. DEZ.B/N,NIROST NUR VAR/ONLY MOD: 02 04 05 55 56	0395.2050.00			
X21	FJ UMR.BUCHSE DEZ. B/N SCREW-IN ASSEMBLY 75 OHMS NUR VAR/ONLY MOD: 75 76	0017.5446.00			
X22	VL STECKLOETOESE 7,5X1,1 PLUG-IN SOLDERING LUG NUR VAR/ONLY MOD: 05	VL 0078.2747.00	-	R&S-ZCHNG.078.2747	0395.2915.01
X22	FJ PRAEZ.N-ST,UMR.NIROST NUR VAR/ONLY MOD: 02 04 05 55 56	0395.2021.00			
X22	FJ UMRUESTST.DEZ.B/SYST.N SCREW-IN ASSEMBLY NUR VAR/ONLY MOD: 75 76	0017.7655.00			
X23	VL STECKLOETOESE 7,5X1,1 PLUG-IN SOLDERING LUG NUR VAR/ONLY MOD: 05	VL 0078.2747.00	-	R&S-ZCHNG.078.2747	0395.2915.01

Für diese Unterlage behalten wir uns alle Rechte vor.

Kennz. Comp. No.	Benennung Designation	Sachnummer Stock No.	Hersteller Manufacturer	Bezeichnung Designation	enthalten in contained in
.	XX VARIANTENERKLAERUNG IDENTIFICATION OF MODELS VAR 02 = GRUNDAUSFUEHRUNG MOD 02 = BASIC MODEL VAR 03 = M.ANSCHL.KABEL 5M LANG MOD 03 = WITH CONNECTING CABLE,5MLENGT				
..	XX ZUGEH.STROML. CIRC.DIAGR. 395.2680 S				
C1	CC 680PF+50-20%5R4000 CERAMIC CAPACITOR	0022.4850.00	DRALORIC	SEFK 5	0395.2880.00
C2	CC 1NF+-10%100V HDK 0805 SMD-CERAMIC-CAPACITOR	0008.2560.00	PHILIPS_CO	2222 590 16614	0395.2815.01
C3	CC 1NF+-10%100V HDK 0805 SMD-CERAMIC-CAPACITOR	0008.2560.00	PHILIPS_CO	2222 590 16614	0395.2815.01
C4	CC 100PF+-1%50V NP0 1206 CERAMIC CHIP CAPACITOR	CC 0099.8415.00	MURATA	GRM42-6C0G 101F 50PT	0395.2815.01
C5	CC 100PF+-1%50V NP0 1206 CERAMIC CHIP CAPACITOR	CC 0099.8415.00	MURATA	GRM42-6C0G 101F 50PT	0395.2815.01
C6	CC 1NF+-10%100V HDK 0805 SMD-CERAMIC-CAPACITOR	0008.2560.00	PHILIPS_CO	2222 590 16614	0395.2815.01
C10	CC 100NF+-10% 50V5K1200 C CAPACITOR NUR VAR/ONLY MOD: 02 03 04	0082.3473.00	PHILIPS_CO	2222 594 16641	0395.2915.01
D10	BL MM74HC393N 2X4B.B.CTR DUAL 4-BIT BINARY COUNTER NUR VAR/ONLY MOD: 02 03	0395.2950.00	PHILIPS_SE	(PC)74HC393N(P)	0395.2915.01
D10	BL MM74HC393N 2X4B.B.CTR DUAL 4-BIT BINARY COUNTER NUR VAR/ONLY MOD: 04	0395.2950.00	PHILIPS_SE	(PC)74HC393N(P)	0395.2915.01
D11	BL MM74HC393N 2X4B.B.CTR DUAL 4-BIT BINARY COUNTER NUR VAR/ONLY MOD: 02 03	0395.2950.00	PHILIPS_SE	(PC)74HC393N(P)	0395.2915.01
D11	BL MM74HC393N 2X4B.B.CTR DUAL 4-BIT BINARY COUNTER NUR VAR/ONLY MOD: 04	0395.2950.00	PHILIPS_SE	(PC)74HC393N(P)	0395.2915.01
D12	HS BC D2732A-25 PROGR.1 EPROM	0395.2944.00			
D13	BL MM74HC151N 8CH.DIGMUX 8CHANNEL DIGITAL MUX NUR VAR/ONLY MOD: 02 03	0395.2967.00	PHILIPS_SE	(PC)74HC151N(P)	0395.2915.01
D13	BL SN74LS151N MULTIPLEXER IC MULTIPLEXER SN74LS151N NUR VAR/ONLY MOD: 04	0266.7963.00	TEXAS	SN74LS151N	0395.2915.01
R1	RL 0,4OW 182 OHM+-1%TK50 RESISTOR	RL 0092.1350.00	ROEDERSTEI	MK1	0395.2815.01
R2	RL 0,4OW 182 OHM+-1%TK50 RESISTOR	RL 0092.1350.00	ROEDERSTEI	MK1	0395.2815.01
R3	RL 0,4OW 10,0KOHM+-1%TK50 RESISTOR	RL 0092.1567.00	ROEDERSTEI	MK1	0395.2815.01
R4	RL 0,4OW 10,0KOHM+-1%TK50 RESISTOR	RL 0092.1567.00	ROEDERSTEI	MK1	0395.2815.01
R10	RL 0,4OW 1,00KOHM+-1%TK50 RESISTOR NUR VAR/ONLY MOD: 02 03	RL 0092.1444.00	ROEDERSTEI	MK1	0395.2915.01
R10	RL 0-OHM-WIDERST. 0204 0-OHM RESISTOR NUR VAR/ONLY MOD: 04	RL 0069.0000.00	DRALORIC	OMA 0204	0395.2915.01
R11	RL 0,4OW 1,00KOHM+-1%TK50 RESISTOR NUR VAR/ONLY MOD: 02 03	RL 0092.1444.00	ROEDERSTEI	MK1	0395.2915.01
R11	RL 0,4OW 10,0KOHM+-1%TK50 RESISTOR NUR VAR/ONLY MOD: 04	RL 0092.1567.00	ROEDERSTEI	MK1	0395.2915.01
R12	RL 0,4OW 1,00KOHM+-1%TK50 RESISTOR NUR VAR/ONLY MOD: 02 03	RL 0092.1444.00	ROEDERSTEI	MK1	0395.2915.01
R12	RL 0,4OW 10,0KOHM+-1%TK50 RESISTOR NUR VAR/ONLY MOD: 04	RL 0092.1567.00	ROEDERSTEI	MK1	0395.2915.01
R13	RL 0,4OW 1,00KOHM+-1%TK50 RESISTOR NUR VAR/ONLY MOD: 02 03	RL 0092.1444.00	ROEDERSTEI	MK1	0395.2915.01

Für diese Unterlage behalten wir uns alle Rechte vor.

Kennz. Comp. No.	Benennung Designation	Sachnummer Stock No.	Hersteller Manufacturer	Bezeichnung Designation	enthalten in contained in
R14	RL O-OHM-WIDERST. 0204 O-OHM RESISTOR NUR VAR/ONLY MOD: 02 03 04	RL 0069.0000.00	DRALORIC	OMA 0204	0395.2915.01
V1	ZE DIODENPAAR2X BAT16-046 PAIR OF DIODES (CALIB.!!) V2 ENTHALTEN IN V1 V2 INCLUDED IN V1	0395.2873.00			0395.2715.00
V3	BJ LM335H TEMP.SENSOR PRECISION TEMP.SENSOR	0395.2867.00	NSC	LM335H	0395.2815.01
V10	AE BZX79/B5V6 0,5W ZDI ZENER DIODE NUR VAR/ONLY MOD: 02 03	AE 0012.5254.00	VALVO	BZX79B5V6	0395.2915.01
X1	FP BUCHSE F.0,33-0,50 SOCKET	0395.2973.00	AMP	6-330808-5	0395.2880.00
X2	FP BUCHSE F.0,33-0,50 SOCKET	0395.2973.00	AMP	6-330808-5	0395.2880.00
X3	FP BUCHSE F.0,33-0,50 SOCKET	0395.2973.00	AMP	6-330808-5	0395.2815.01
X4	FP BUCHSE F.0,33-0,50 SOCKET	0395.2973.00	AMP	6-330808-5	0395.2815.01
X5	FP BUCHSE F.MAX.0,65 SOCKET	0470.6447.00	BINDER	08-0090-00-36	0395.2880.00
X10	FP IND.STECKERLEISTE 12P. CONNECTOR NUR VAR/ONLY MOD: 02 03 04 05	0516.0200.00	BINDER	10-9839-00-12	0395.2915.01
X11	VL LOETOESE 6,9 X 0,9 SOLDERING PIN NUR VAR/ONLY MOD: 02 03	VL 0082.5253.00	DYTRONA	0082.5253	0395.2915.01
X12	VL LOETOESE 6,9 X 0,9 SOLDERING PIN NUR VAR/ONLY MOD: 02 04 05	VL 0082.5253.00	DYTRONA	0082.5253	0395.2915.01
X13	VL LOETOESE 6,9 X 0,9 SOLDERING PIN NUR VAR/ONLY MOD: 02 04 05	VL 0082.5253.00	DYTRONA	0082.5253	0395.2915.01
X14	VL LOETOESE 6,9 X 0,9 SOLDERING PIN NUR VAR/ONLY MOD: 04 05	VL 0082.5253.00	DYTRONA	0082.5253	0395.2915.01
X15	VL LOETOESE 6,9 X 0,9 SOLDERING PIN NUR VAR/ONLY MOD: 02	VL 0082.5253.00	DYTRONA	0082.5253	0395.2915.01
X16	VL LOETOESE 6,9 X 0,9 SOLDERING PIN NUR VAR/ONLY MOD: 02 04 05	VL 0082.5253.00	DYTRONA	0082.5253	0395.2915.01
X17	VL LOETOESE 6,9 X 0,9 SOLDERING PIN NUR VAR/ONLY MOD: 02 03 04 05	VL 0082.5253.00	DYTRONA	0082.5253	0395.2915.01
X18	VL LOETOESE 6,9 X 0,9 SOLDERING PIN NUR VAR/ONLY MOD: 04 05	VL 0082.5253.00	DYTRONA	0082.5253	0395.2915.01
X19	FP STIFTL.WIN 36P.R2,54 ANGLE PIN CONNECTOR NUR VAR/ONLY MOD: 03 1-POLIG/1 PIN	FP 0243.3578.00	BINDER	742-5-11-0187-00-36	0395.2915.01
X20	VL LOETOESE 6,9 X 0,9 SOLDERING PIN NUR VAR/ONLY MOD: 04	VL 0082.5253.00	DYTRONA	0082.5253	0395.2915.01
X21	VL STECKLOETOESE 7,5X1,1 PLUG-IN SOLDERING LUG NUR VAR/ONLY MOD: 05	VL 0078.2747.00	-	R&S-ZCHNG.078.2747	0395.2915.01
X22	VL STECKLOETOESE 7,5X1,1 PLUG-IN SOLDERING LUG NUR VAR/ONLY MOD: 05	VL 0078.2747.00	-	R&S-ZCHNG.078.2747	0395.2915.01
X23	VL STECKLOETOESE 7,5X1,1 PLUG-IN SOLDERING LUG NUR VAR/ONLY MOD: 05	VL 0078.2747.00	-	R&S-ZCHNG.078.2747	0395.2915.01

Für diese Unterlage behalten wir uns alle Rechte vor.

ROHDE&SCHWARZ

Stromläufe
Bestückungspläne
Circuit diagrams
Components plans
Schémas de circuit
Plans des composants

(R 29500 Bl. 4)
095.1000 Bl. 4

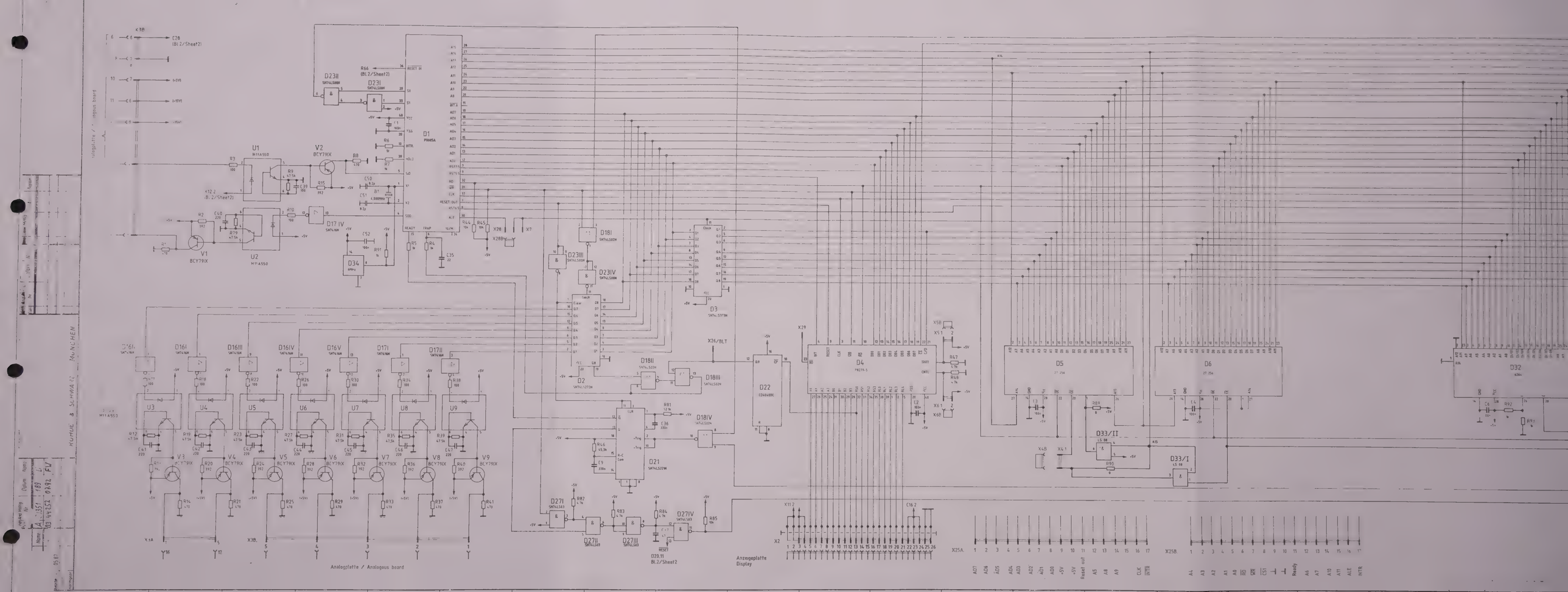

Analogplatte / Analogous board
Anzeigeplatte Display
D1
D2
D3
D4
D5
D6
D21
D22
D32
D33/II
D33/I
U1
U2
V1
V2
V3
V4
V5
V6
V7
V8
V9
D17 IV
D34
D23II
D23I
D23III
D23IV
D18I
D18II
D18III
D18IV
D16I
D16III
D16IV
D16V
D17I
D17II
D27I
D27II
D27III
D27IV
X26/BLT
X29
X25A
X25B
X3A
X3B
X2
X7
X28
X1
X4B
X6B
X5B
X5A
X11
C16

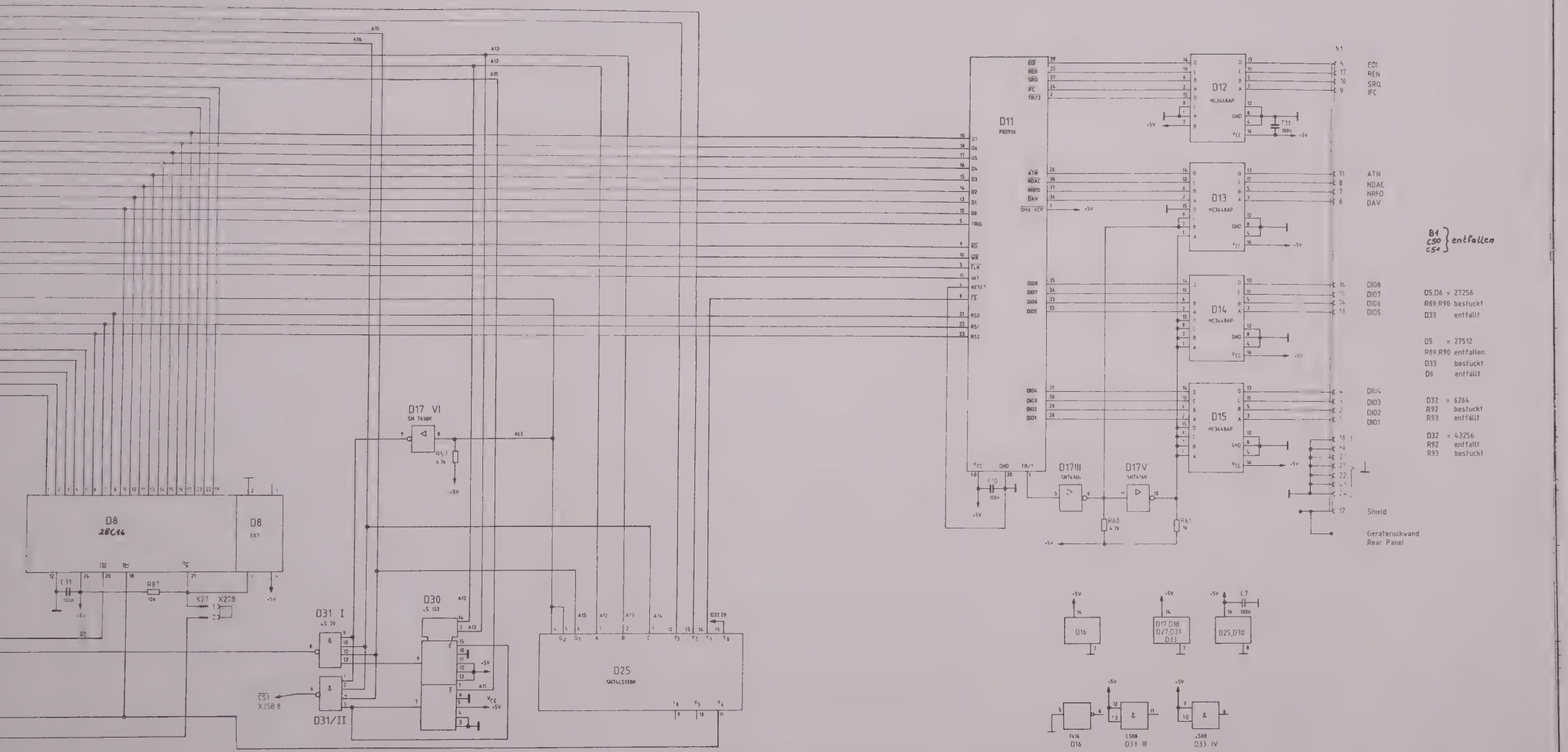

Stromlauf zu

UDS5 Rechner
UDS5 Processor

Zeichn. Nr. 349. 1910. 01S

Blatt-Nr. 1

349 1510V

349 1510

2 Bl.

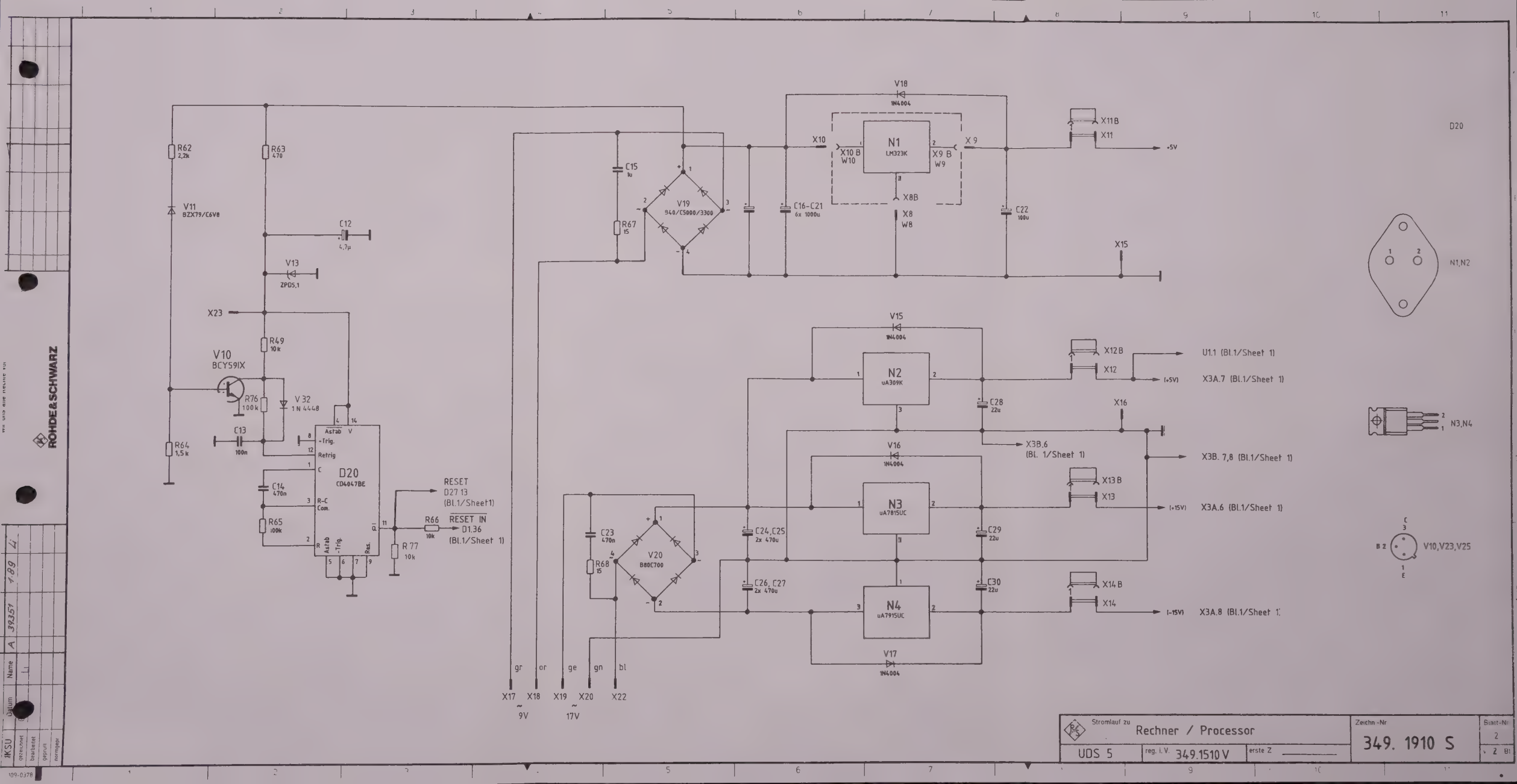

ROHDE&SCHWARZ

IMSU			
gezeichnet			
bearbeitet			
geprüft			
normiert			
Datum	1.89		
Name	L		
A	39351		

Stromlauf zu: Rechner / Processor

UDS 5 | reg. i. V. 349.1510 V | erste Z

Zeichn.-Nr: 349. 1910 S

Blatt-Nr: 2 v. 2 Bl

109-0378

Ansicht und Leitungsfüh
View of tracks on compo

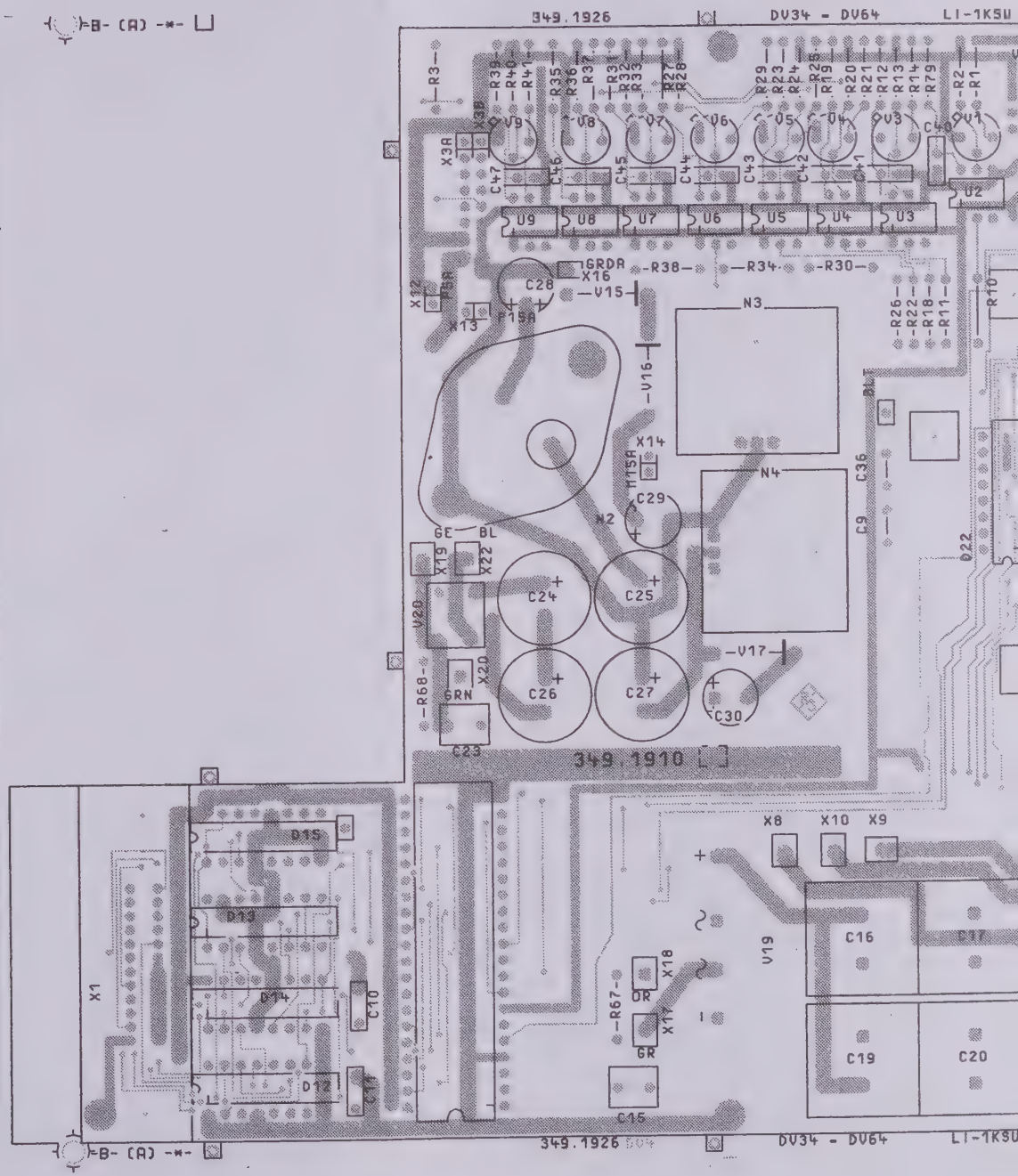

(hierzu HVC 250)

ACHTUNG: EGB!
Elektrostatisch gefährdete Bauelemente erfordern eine besondere Handhabung.

ATTENTION ESD!
Electrostatic sensitive devices require a special handling.

ng Bauteilseite
nt side

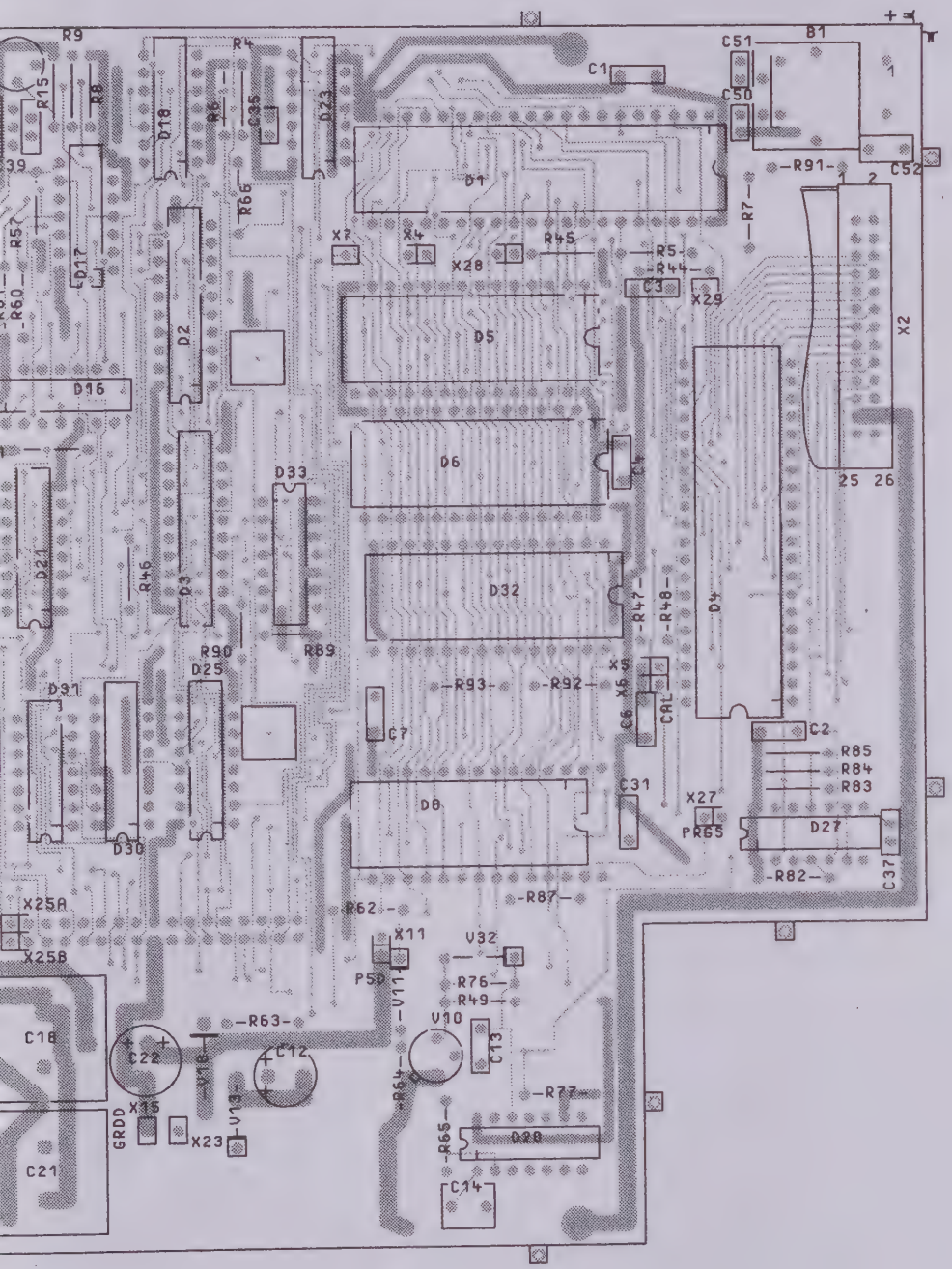

A	39351	1.89	Li	Maße ohne Toleranzangabe		Maßstab 1 : 1	
						Halbzeug, Werkstoff	
				1KGU	Tag	Name	Benennung
				Bearb.	10.88	LI	RECHNER PROCESSOR
				Gepr.			Z
				Norm			
				ROHDE&SCHWARZ		Zeichn.-Nr. 349.1910	Blatt-Nr 2
				zu Gerät UDS 5		reg. i. V. 349.1510 V	erste Z.
Änd. Zust.	Änderungs-Mitteilung	Tag	Name				v Bl.

11.6107.87

Ansicht und Leitungsführu
View of tracks on solder s

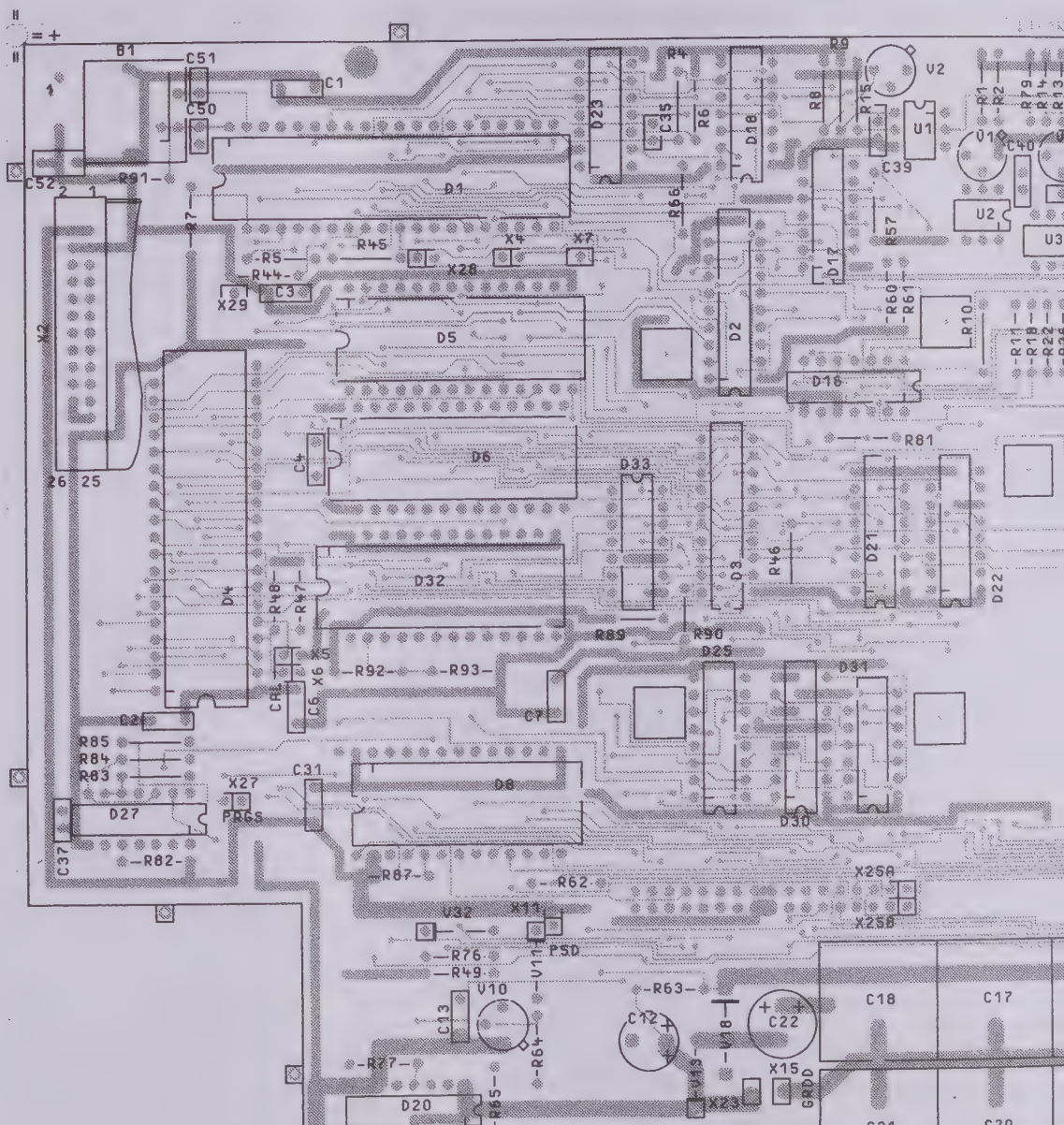

Für diese Unterlage behalten wir uns alle Rechte vor

(hierzu HVC 250)

ACHTUNG: EGB!
Elektrostatisch gefährdete Bauelemente erfordern eine besondere Handhabung.

ATTENTION ESD!
Electrostatic sensitive devices require a special handling.

ng Lötseite
de

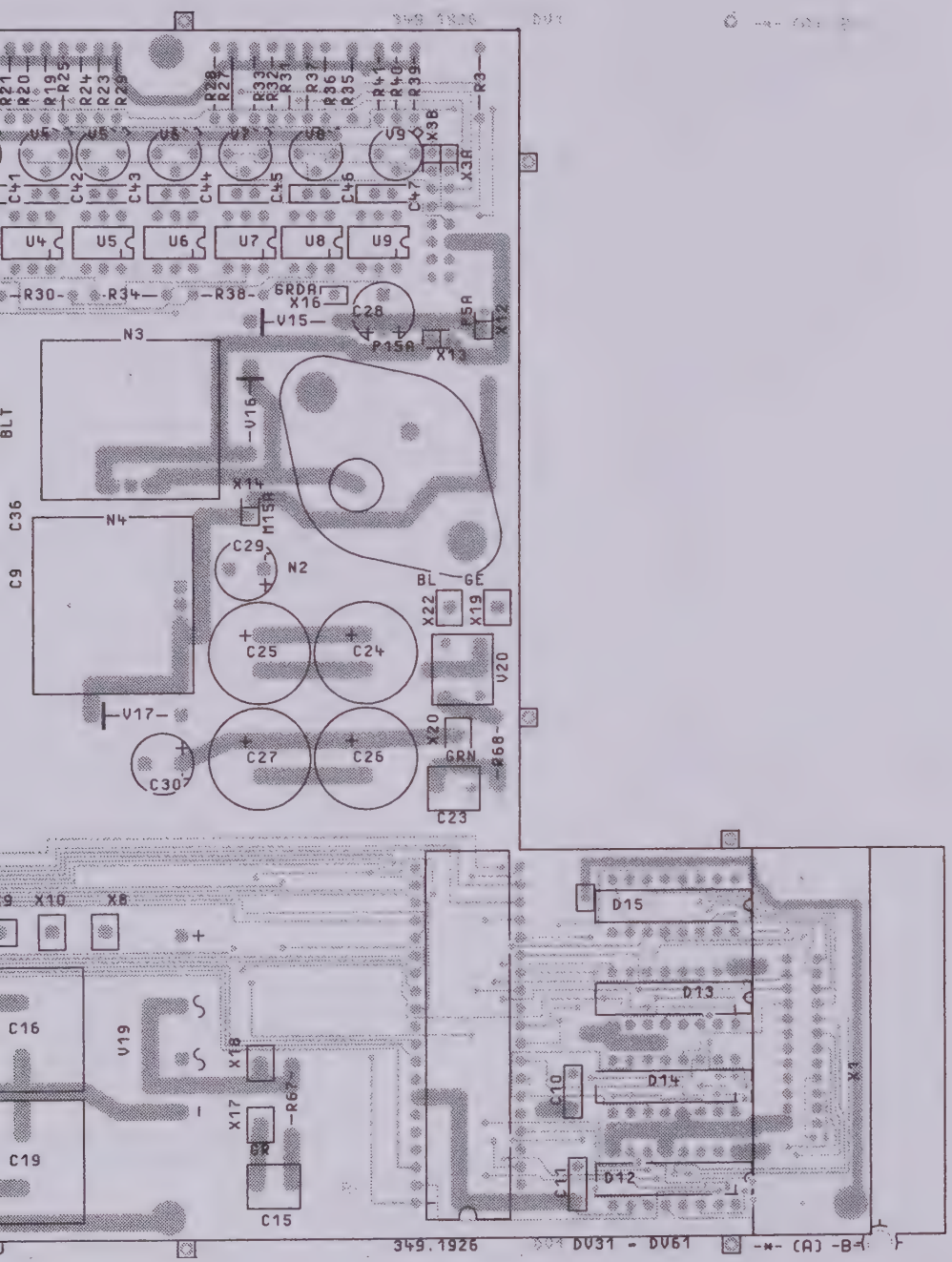

A	39351	1.89	L'	Maße ohne Toleranzangabe		Maßstab 1 : 1	
						Halbzeug, Werkstoff	
				1KGU	Tag	Name	Benennung
				Bearb	10.88	LI	RECHNER PROCESSOR
				Gepr.			Z
				Norm			
nd. ust.	Änderungs-Mitteilung	Tag	Name	ROHDE&SCHWARZ		Zeichn.-Nr. 349.1910	Blatt-Nr. 3 v. Bl.
				zu Gerät UDS 5		reg. i. V. 349.1510 V	erste Z.

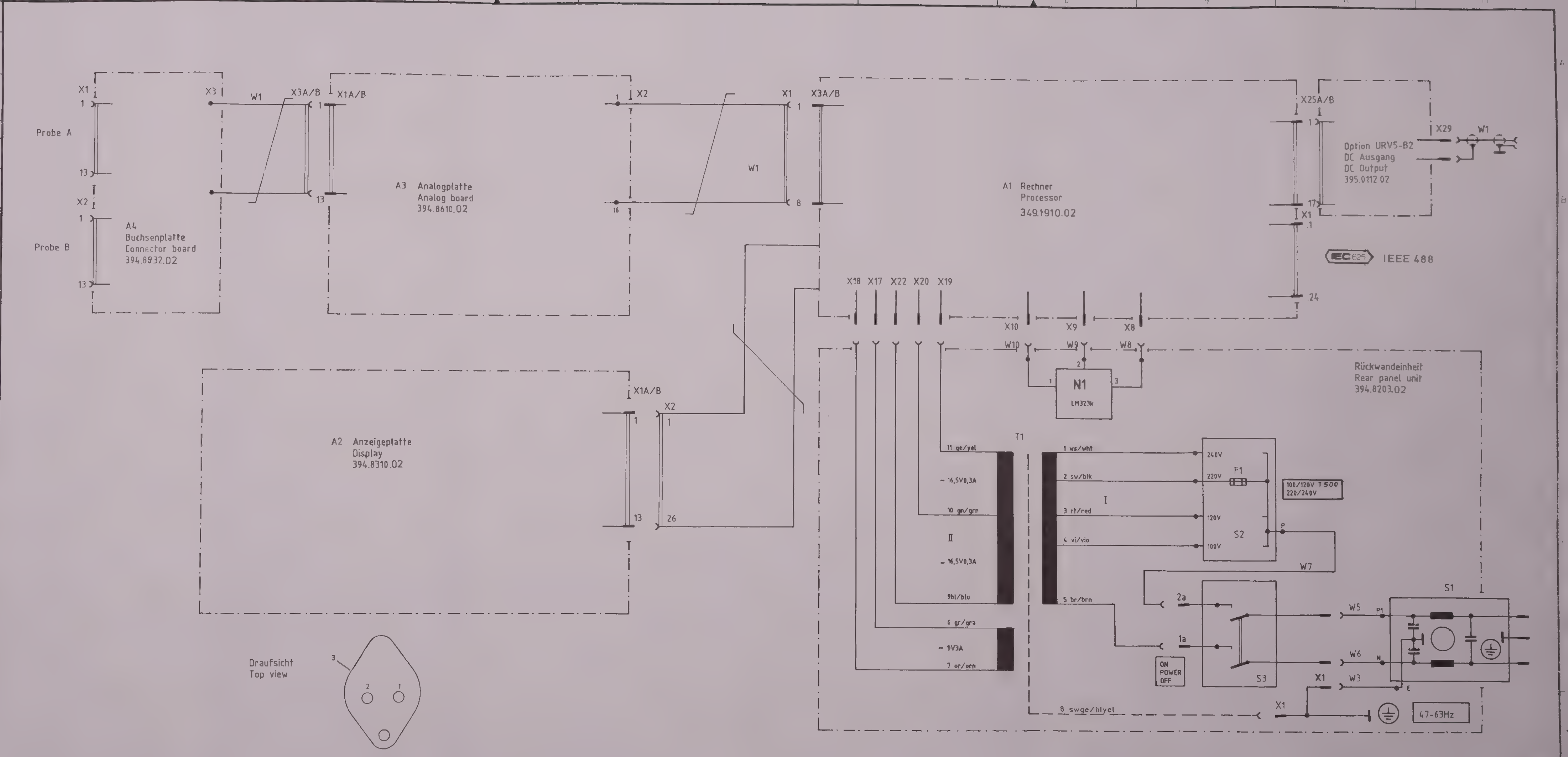

Stromlauf zu	Millivoltmeter URV5	Zeichn.-Nr. 394.8010S
URV5	reg. i. V. 394.8010V	erste Z.

Änd. zust.	Änd. Mittlg. Nr.	Datum	Name
A	30853	10.83	Li
B	31396	08.84	Li
C	32700	03.85	Li
D	35004	04.86	Li
E	39367	3.88	
F	40638	1.89	Li
08	51259	8.95	Wu

	Datum	Name
gezeichnet	11.07.83	Hg
bearbeitet	07.83	Li

Zeichn.-Nr. 1KGU

ROHDE&SCHWARZ

Für diese Zeichnung behalten wir uns alle Rechte vor

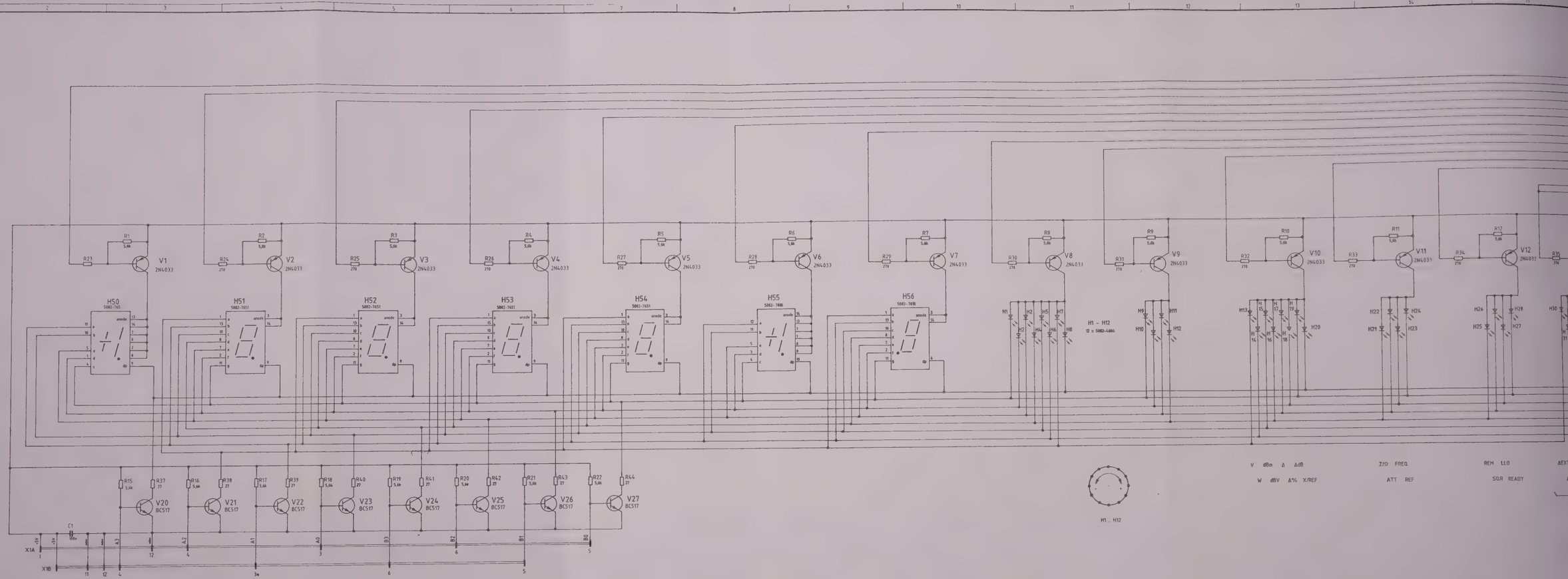
H50 5082-7655
H51 5082-7651
H52 5082-7651
H53 5082-7651
H54 5082-7651
H55 5082-7686
H56 5082-7618
anode
dp
R1 5,6k
R2 5,6k
R3 5,6k
R4 5,6k
R5 5,6k
R6 5,6k
R7 5,6k
R8 5,6k
R9 5,6k
R10 5,6k
R11 5,6k
R12 5,6k
R23 270
R24 270
R25 270
R26 270
R27 270
R28 270
R29 270
R30 270
R31 270
R32 270
R33 270
R34 270
V1 2N4033
V2 2N4033
V3 2N4033
V4 2N4033
V5 2N4033
V6 2N4033
V7 2N4033
V8 2N4033
V9 2N4033
V10 2N4033
V11 2N4033
V12 2N4033
H1 – H12
12 x 5082-4684
H1 .. H12
R15 5,6k
R16 5,6k
R17 5,6k
R18 5,6k
R19 5,6k
R20 5,6k
R21 5,6k
R22 5,6k
R37 27
R38 27
R39 27
R40 27
R41 27
R42 27
R43 27
R44 27
V20 BC517
V21 BC517
V22 BC517
V23 BC517
V24 BC517
V25 BC517
V26 BC517
V27 BC517
C1
X1A
X1B
+5V
-5V
A3
A2
A1
A0
B3
B2
B1
B0
V dBm Δ ΔdB
W dBV Δ% X/REF
Z/Ω FREQ
ATT REF
REM LLO
SQR READY

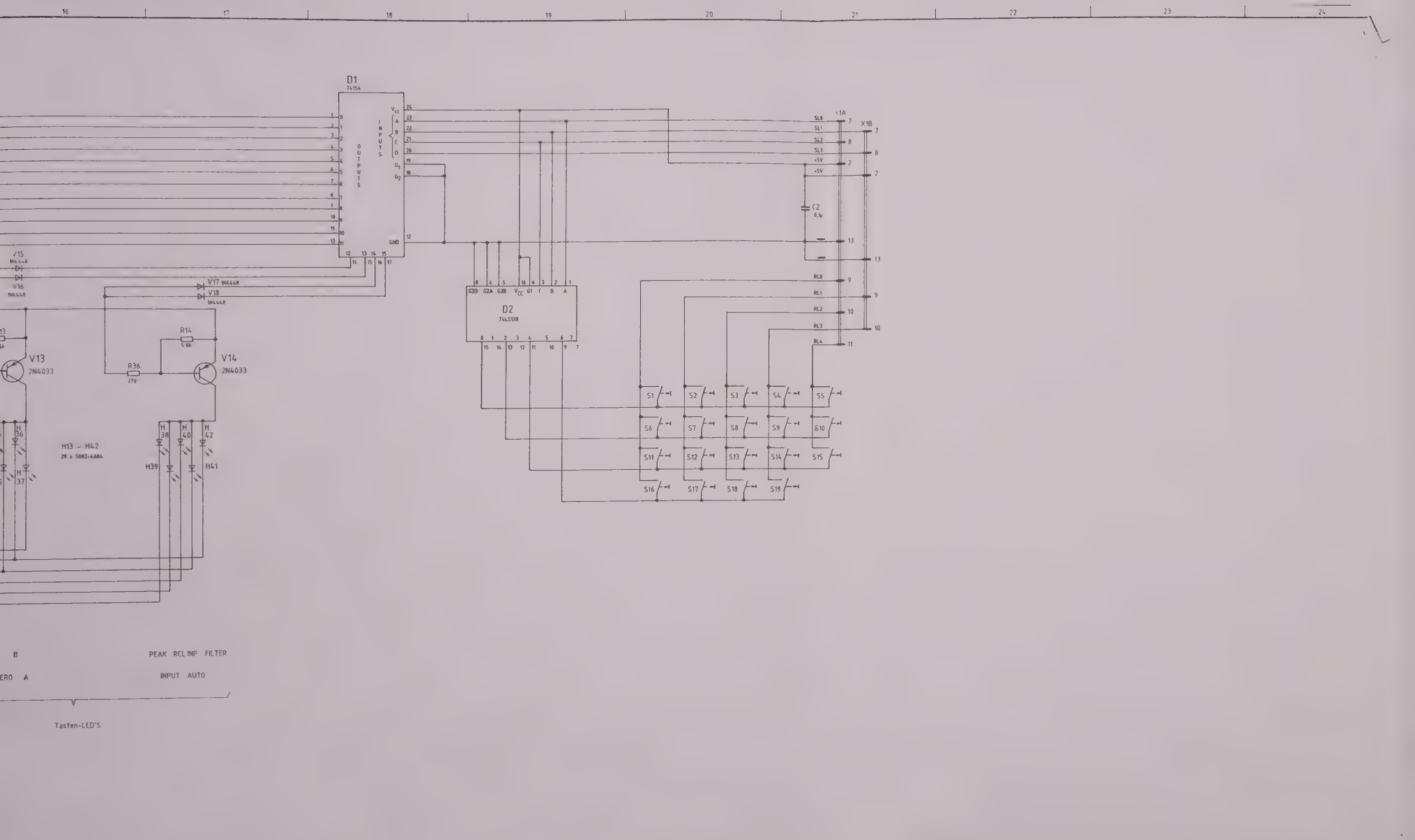

ROHDE & SCHWARZ	A	35004	04.86	Li					1KGU	Tag	Name	Benennung	Anzeige / Display	Zeichn.-Nr. 394.8310 S
									Bearb.	2.12.82	Li			
									Gepr.					
	Ind. Zust.	Änd.-Mitteilung	Datum	Name	Änd. Zust.	Änd.-Mitteilung	Datum	Name	Norm				zu Gerät	reg. I. V 394 8010V / ersetzt Z 394 8010

Für diese Unterlage behalten
wir uns alle Rechte vor.

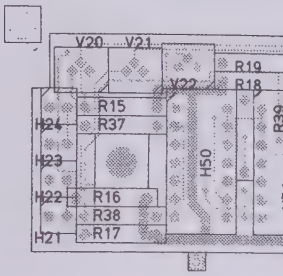

Ansicht und Leitungsführung Bauteilseite
View of tracks on component side

Ansicht und Leitungsführung Lötseite
View of tracks on solder side

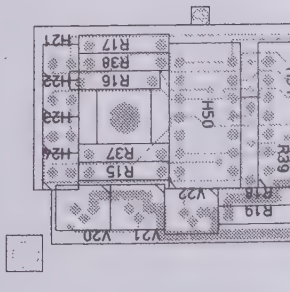

Symbolschlussel

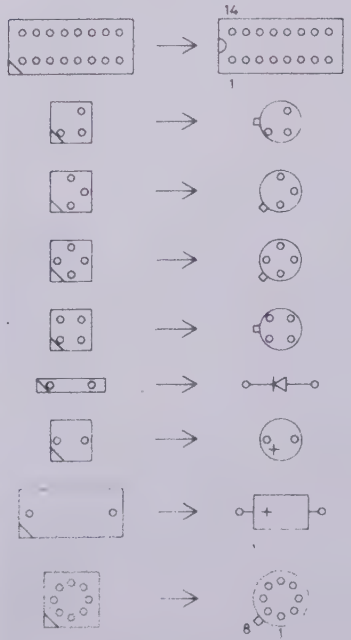

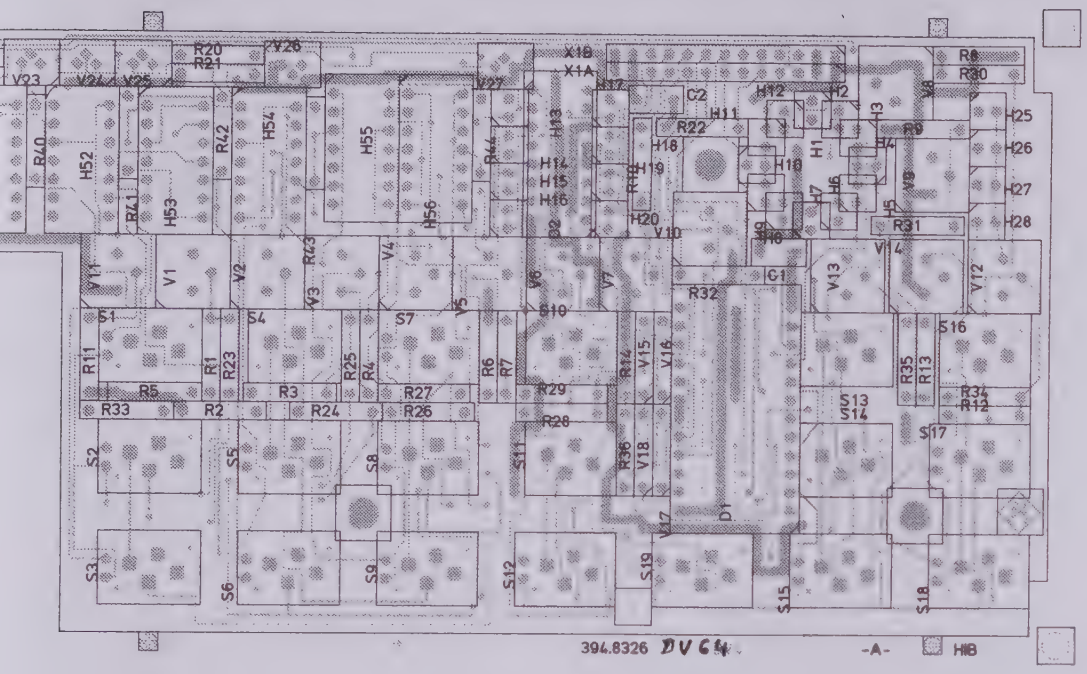

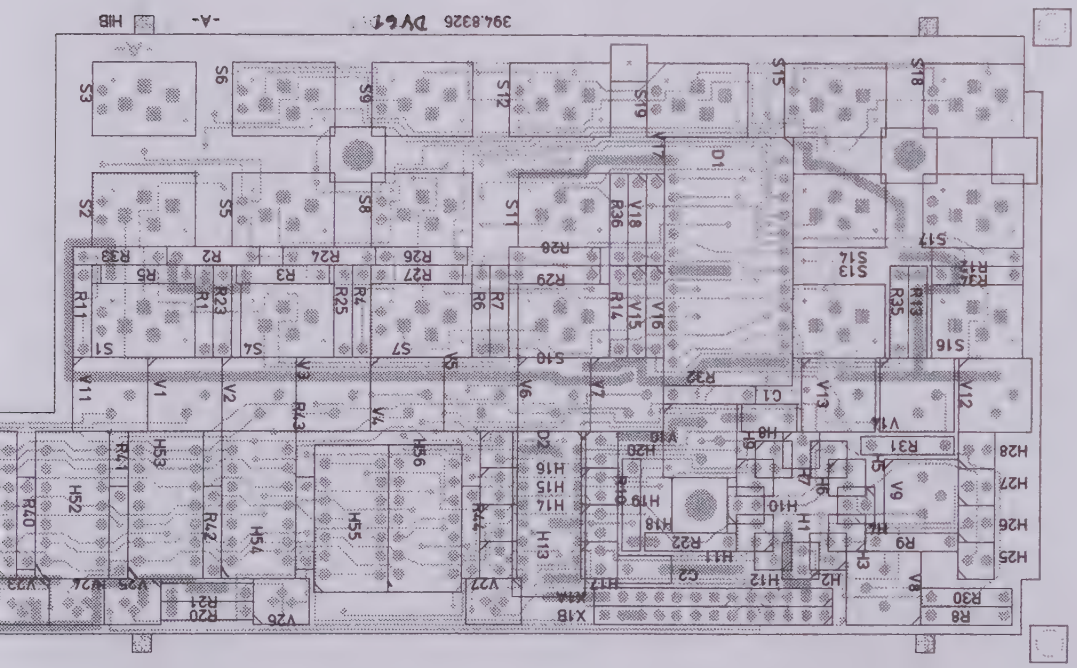

A	——	3.83	LI	Maße ohne Toleranzangabe		Maßstab 1 : 1	
						Halbzeug, Werkstoff	
				1KGU	Tag	Name	Benennung
				Bearb.	2.83	LI	Anzeige Display
				Gepr.			Z
				Norm			
				ROHDE&SCHWARZ		Zeichn.-Nr. 394.8310	Blatt-Nr. 2
nd. ust.	Änderungs-Mitteilung	Tag	Name	zu Gerät		reg. i. V.	erste Z. v. Bl.

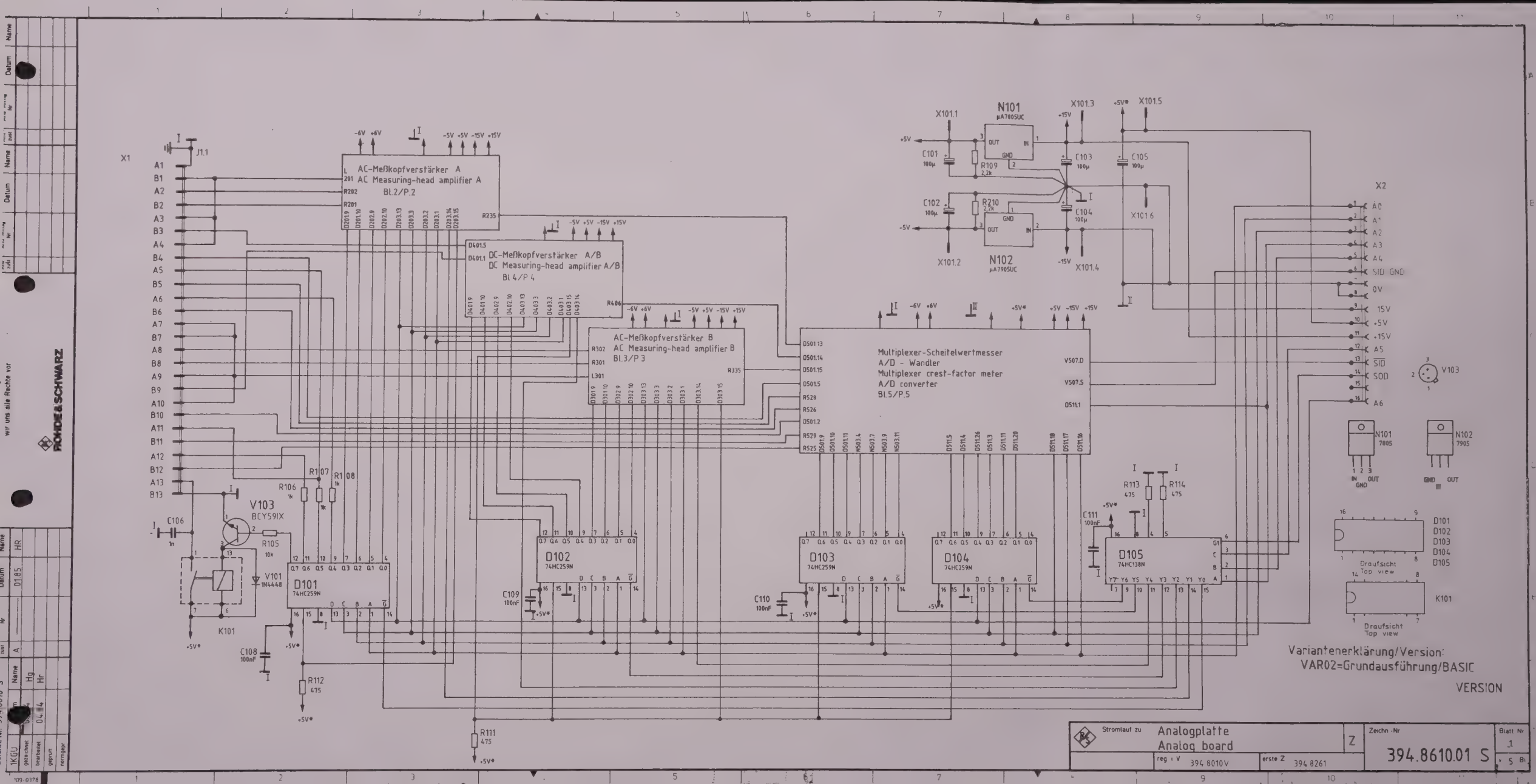
AC-Meßkopfverstärker A
AC Measuring-head amplifier A
Bl.2/P.2
DC-Meßkopfverstärker A/B
DC Measuring-head amplifier A/B
Bl.4/P.4
AC-Meßkopfverstärker B
AC Measuring-head amplifier B
Bl.3/P.3
Multiplexer-Scheitelwertmesser
A/D - Wandler
Multiplexer crest-factor meter
A/D converter
Bl.5/P.5
N101 µA7805UC
N102 µA7905UC
V103 BCY59IX
V101 1N4448
K101
D101 74HC259N
D102 74HC259N
D103 74HC259N
D104 74HC259N
D105 74HC138N
Draufsicht Top view
Variantenerklärung/Version:
VAR02=Grundausführung/BASIC
VERSION
Stromlauf zu Analogplatte Analog board
reg. Nr 394 8010V
erste Z 394 8261
Zeichn.-Nr 394.8610.01 S
Blatt Nr 1
wir uns alle Rechte vor
ROHDE & SCHWARZ

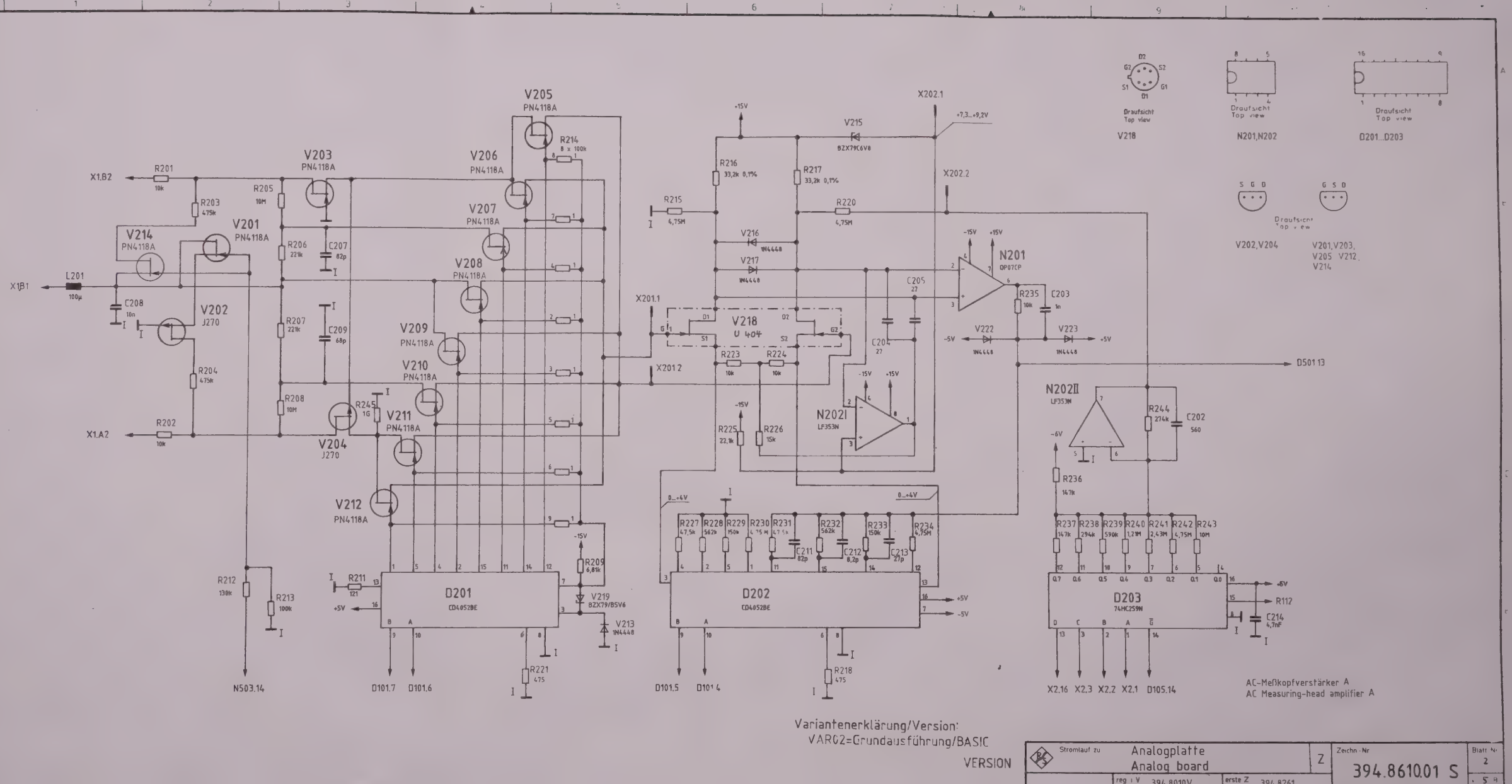

V205
PN4118A
V203
PN4118A
V206
PN4118A
V207
PN4118A
V208
PN4118A
V209
PN4118A
V210
PN4118A
V211
PN4118A
V212
PN4118A
V214
PN4118A
V201
PN4118A
V202
J270
V204
J270
V215
BZX79C6V8
V216
1N4448
V217
1N4448
V218
U 404
V222
1N4448
V223
1N4448
V219
BZX79/B5V6
V213
1N4448
N201
OP07CP
N202I
LF353N
N202II
LF353N
D201
CD4052BE
D202
CD4052BE
D203
74HC259N
X1.B2
X1.B1
X1.A2
L201
100µ
R201
10k
R202
10k
R203
475k
R204
475k
R205
10M
R206
221k
R207
221k
R208
10M
R209
6,81k
R211
121
R212
130k
R213
100k
R214
8 x 100k
R215
4,75M
R216
33,2k 0,1%
R217
33,2k 0,1%
R218
475
R220
4,75M
R221
475
R223
10k
R224
10k
R225
22,1k
R226
15k
R227
47,5k
R228
562k
R229
150k
R230
4,75M
R231
47,5k
R232
562k
R233
150k
R234
4,75M
R235
10k
R236
147k
R237
147k
R238
294k
R239
590k
R240
1,21M
R241
2,43M
R242
4,75M
R243
10M
R244
274k
R245
1G
C202
560
C203
1n
C204
27
C205
27
C207
82p
C208
10n
C209
68p
C211
82p
C212
8,2p
C213
27p
C214
4,7nF
X202.1
X202.2
X201.1
X201.2
+7,3...+9,2V
+15V
-15V
+5V
-5V
-6V
D501.13
N503.14
D101.7
D101.6
D101.5
D101.4
X2.16
X2.3
X2.2
X2.1
D105.14
R112
Draufsicht
Top view
V218
N201,N202
D201...D203
V202,V204
V201,V203,
V205 V212,
V214
AC-Meßkopfverstärker A
AC Measuring-head amplifier A
Variantenerklärung/Version:
VAR02=Grundausführung/BASIC
VERSION
Stromlauf zu
Analogplatte
Analog board
Z
Zeichn.-Nr.
394.8610.01 S
Blatt Nr.
2
reg. i V 394.8010V
erste Z 394.8261
Zeichn.-Nr. 8610S
1KGU
gezeichnet 03.84
bearbeitet 03.84
geprüft
normgepr.
Datum
Name
A
03
44254
01.85
12.90
HR
Li
ROHDE&SCHWARZ
wir uns alle Rechte vor.

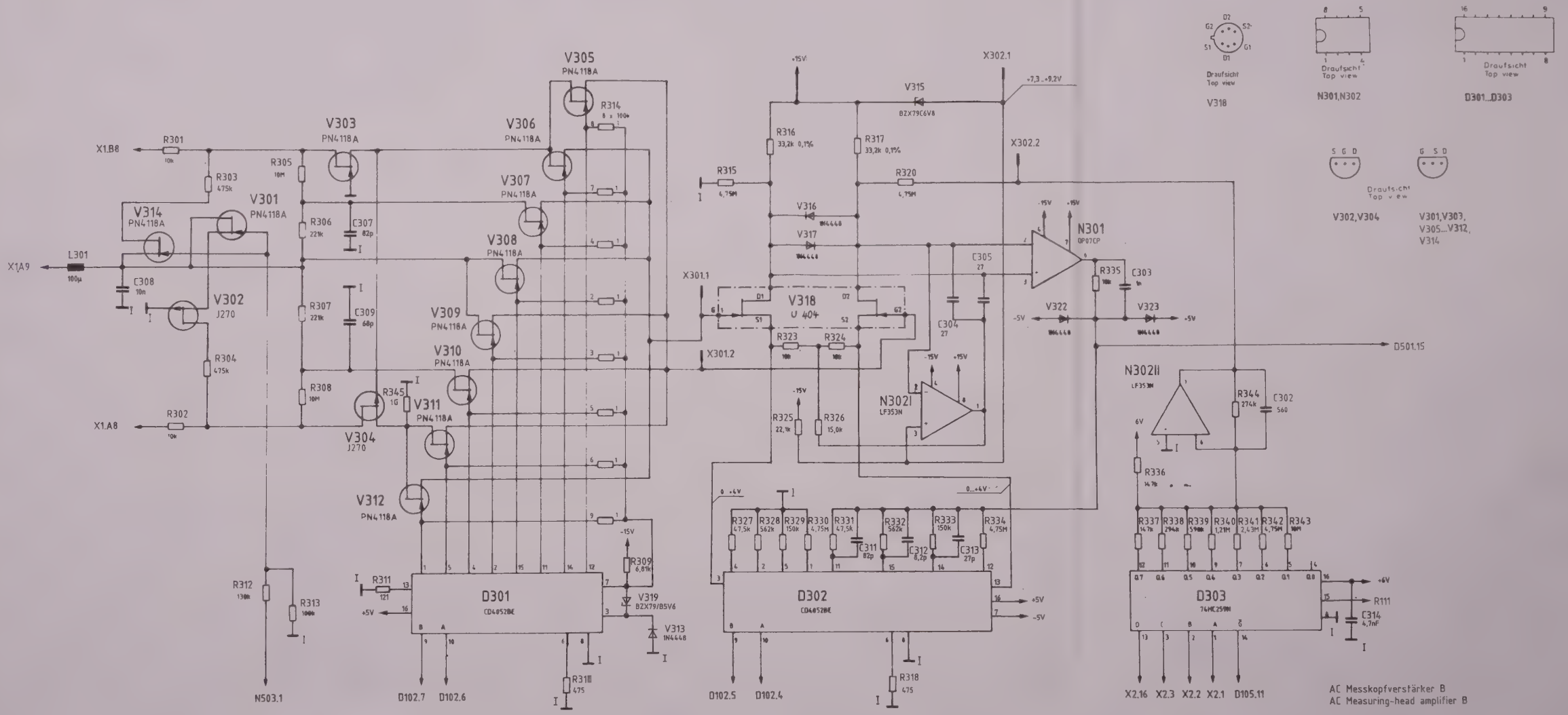

Variantenerklärung/Version:
VAR02=Grundausführung/BASIC
VERSION

Stromlauf zu	Analogplatte Analog board	Z	Zeichn. Nr 394.8610.01 S
reg. : V 394.8010	erste Z 394.8261		Blatt Nr 3 5 Bl

ROHDE & SCHWARZ
wir uns zum Rechte vor
Datum 01.85 03.84
Name HR Hg Ht
A 03 442254 2.90
1KGU gezeichnet bearbeitet geprüft normiert

DC-Meßkopfverstärker A/B
DC Measuring-head amplifier A/B

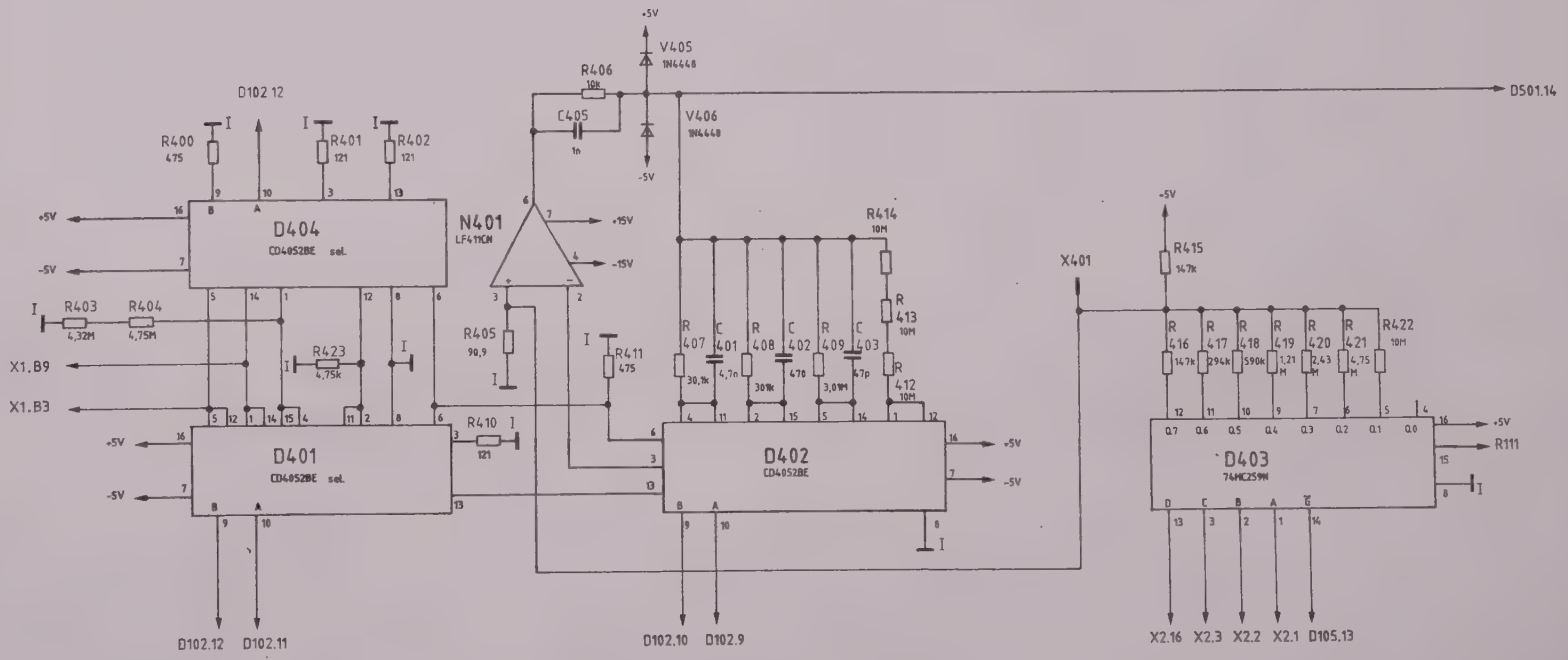

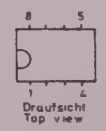

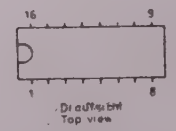

Variantenerklärung/Version:
VAR02=Grundausführung / BASIC MODEL

Blatt 4

Stromlauf zu	Analogplatte Analog board	Z	Zeichn Nr 394.8610.01 S reg iV 394.8010V · erste Z 394.8261

ROHDE & SCHWARZ MÜNCHEN

Diese Zeichnung ist unser Eigentum vervielfältigung unbefugte Verwertung Mitteilung an andere ist strafbar und schadenersatzpflichtig

gezeichnet	03	Hg	A	—	01.85	HR
bearbeitet	03.84	Hr	B	34359	09.85	Li
geprüft						
normgepr						

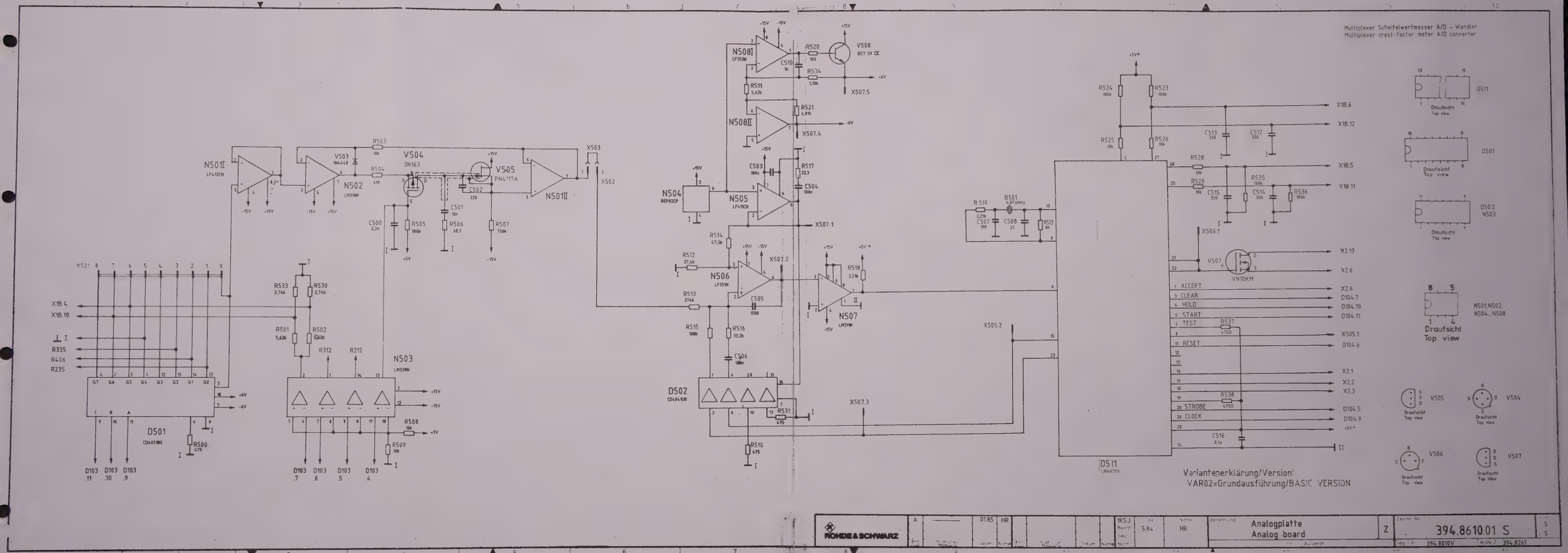
Multiplexer Scheitelwertmesser A/D - Wandler
Multiplexer crest-factor meter A/D converter
Variantenerklärung/Version:
VAR02=Grundausführung/BASIC VERSION
ROHDE&SCHWARZ
Analogplatte
Analog board
394.8610.01 S
394.8010V
394.8261
N501,N502,
N504...N508
Draufsicht
Top view
D501
CD4051BE
N503
LM339N
N501II
LF412CN
N502
LM318N
V504
3N163
V505
PN4117A
N501II
N504
REF02CP
N505
LF411CN
N506
LF351N
N507
LM311N
N508I
LF353N
N508II
D502
CD4041UB
D511
LNAA005
V507
VN10KM
X501
X1B.4
X1B.10
R335
R406
R235
X503
X502
X507.1
X507.2
X507.3
X507.4
X507.5
X505.2
X506.1
X1B.6
X1B.12
X1B.5
X1B.11
X2.13
X2.6
X2.4
X2.1
X2.2
X2.3
X505.1
D104.7
D104.10
D104.11
D104.6
D104.5
D104.9
D103
.11
.10
.9
.7
.6
.5
.4
+15V
-15V
+5V
+6V
-6V
+5V*
Z
5.84
01.85
HR
1KSJ
Benennung
Zeichen Nr
Reg.-V
Leiste Z

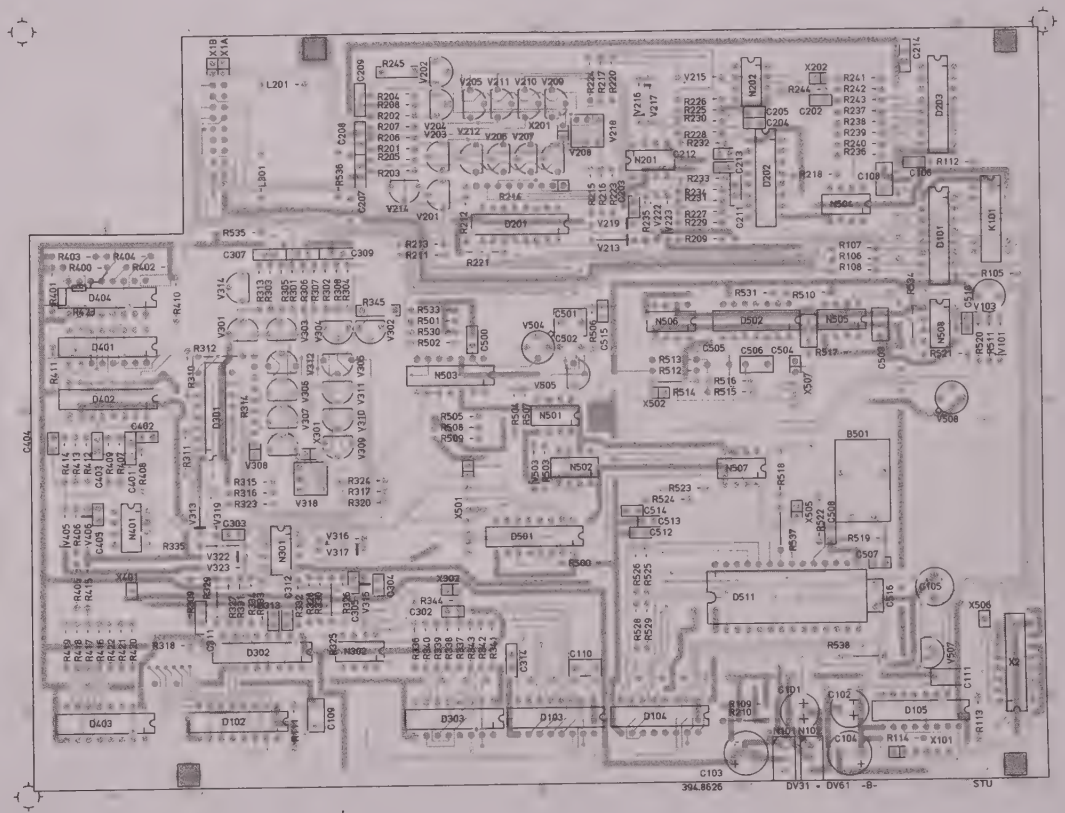

Ansicht und Leitungsführung Lötseite
View of tracks on solder side

Variantenerklärung / Version:
VAR 02 Grundausführung / Basic model

Achtung! MOS-Bauteile
Caution. MOS components

B		2.85	HR	Maße ohne Toleranzangabe		Maßstab 1 : 1	
C	34359	09.85	Li			Halbzeug, Werkstoff	
				1KSU	Tag	Name	Benennung: Analogplatte / ANALOGBOARD — Z
				Bearb	2.85	HR	
				Gepr			
				Norm			
				ROHDE&SCHWARZ		Zeichn-Nr 394.8610 01	Blatt-Nr 3
And. Zust.	Änderungs-Mitteilung	Tag	Name	zu Gerät		reg. i V 394.8010V	erste Z 394.8281

Für diese Unterlage behalten wir uns alle Rechte vor

Projection mode E

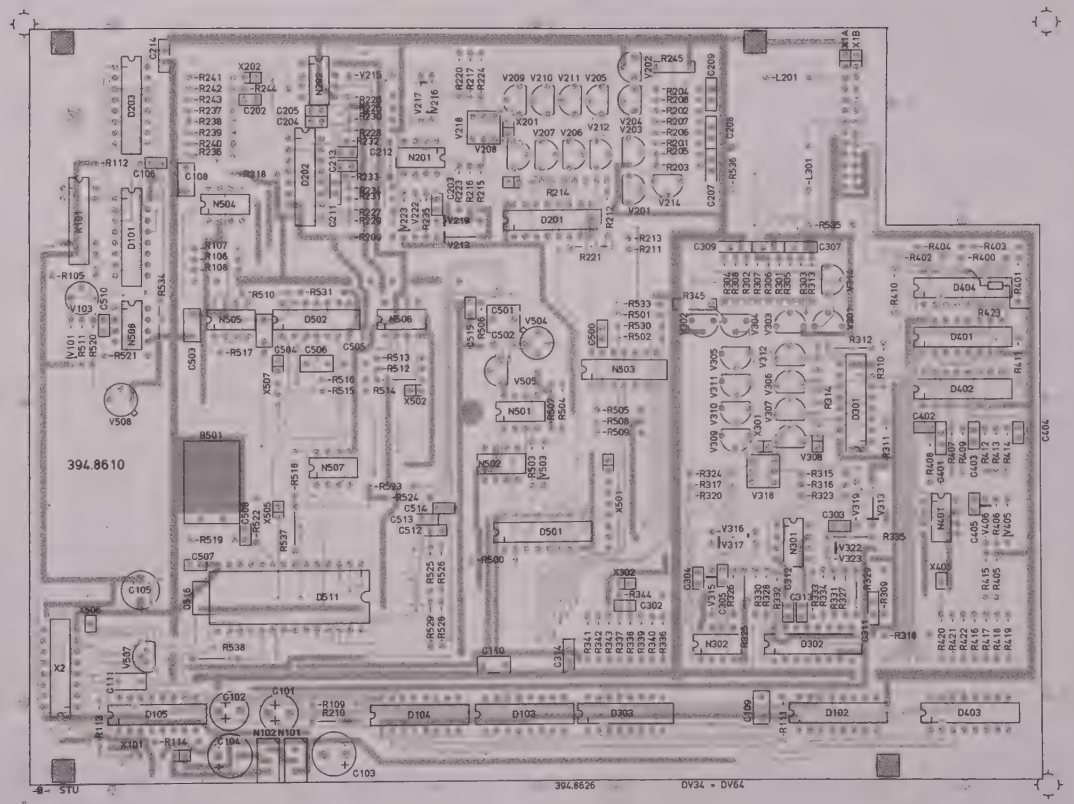

Ansicht und Leitungsführung Bauteilseite
View of tracks on component side

Variantenerklärung / Version:
VAR 02=Grundausführung / Basic model

Achtung! MOS-Bauteile
Caution. MOS components

B		2.85	HR	Maße ohne Toleranzangabe		Maßstab 1 : 1	
C	34359	09.85	Li			Halbzeug, Werkstoff	
				1KSU	Tag / Name	Benennung	
				Bearb	2.85 HR	Analogplatte	Z
				Gepr		ANALOGBOARD	
				Norm			
				ROHDE&SCHWARZ		Zeichn.-Nr 394.8610 | 01	Blatt-Nr 2 v. Bl
Änd Zust.	Änderungs-Mitteilung	Tag	Name	zu Gerät		reg. i. V. 394.8010V	erste Z 394.8281

Für diese Unterlage behalten wir uns alle Rechte vor

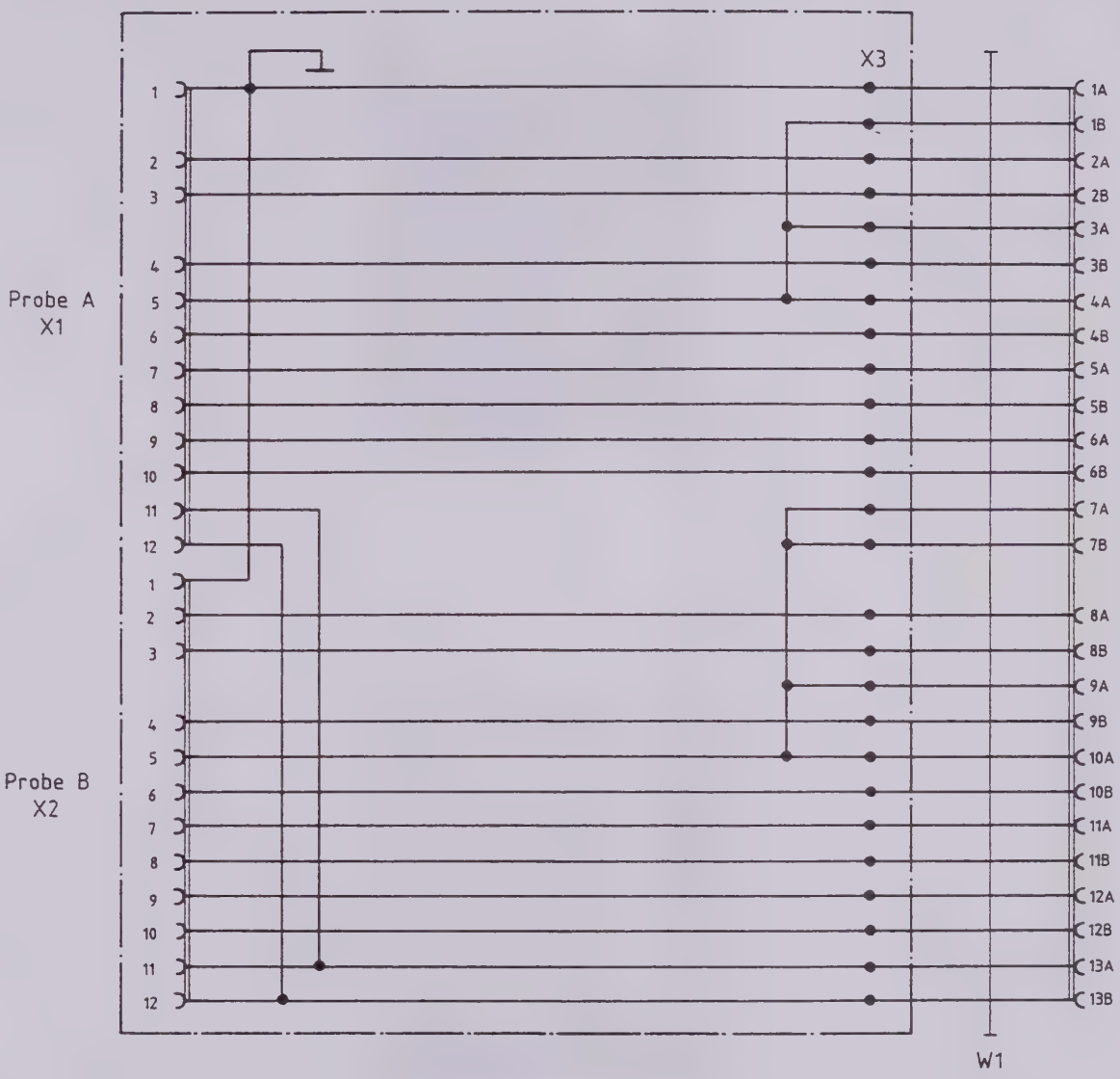

Variantenerklärung/Versions:
VAR 02 = Grundausführung/Basic model

				1KSU	Tag	Name
				Bearb	03.86	Li
				Gepr		
				Norm		
And Zust	Änderungs-Mitteilung	Tag	Name	ROHDE&SCHWARZ		
				zu Gerät		

Benennung

Buchsenplatte
Connector board

Zeichn.-Nr 394.8932 S

Blatt-Nr 1

v 1 Bl

reg.: V 394.8010 V erste Z 394.8010

Für diese Unterlage behalten wir uns alle Rechte vor

PF 095 -230-0781 Erich Feucht, München 07 6001 81

Ansicht und Leitungsführung Bauteilseite
View of tracks on component side

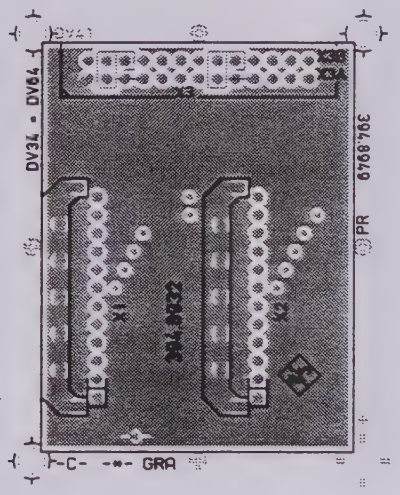

DV 41

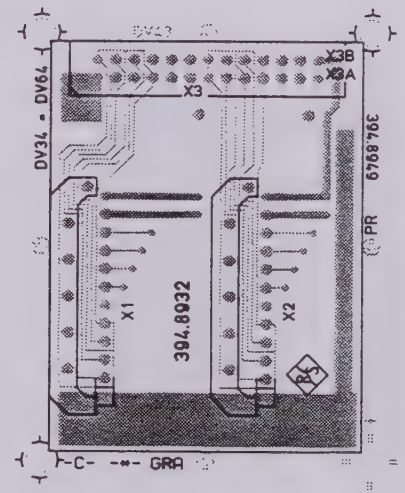

DV 43

VARIANTENERKLÄRUNG / VERSION
VAR 02 – GRUNDAUSFÜHRUNG / BASIC MODEL

				Maße ohne Toleranzangabe		Maßstab 1 : 1	
						Halbzeug, Werkstoff	
				1KSU	Tag	Name	Benennung
				Bearb	03.86	LI	Buchsenplatte CONNECTOR BOARD
				Gepr			
				Norm			
				ROHDE&SCHWARZ			Zeichn.-Nr 394.8932.01
And Zust	Anderungs-Mitteilung	Tag	Name	zu Gerät			reg i V 394.8010 V erste Z

Z

Blatt-Nr 2

v Bl

Für diese Unterlage behalten
wir uns alle Rechte vor

Ansicht und Leitungsführung Lötseite
View of tracks on solder side

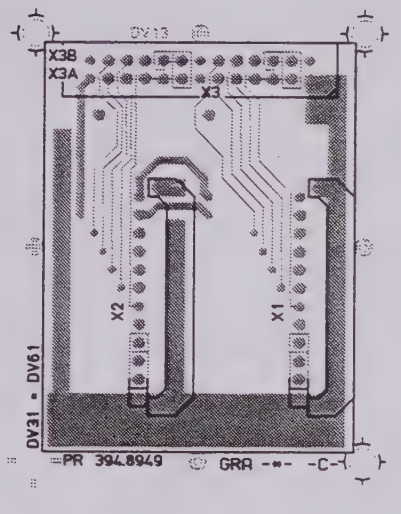

DV 13

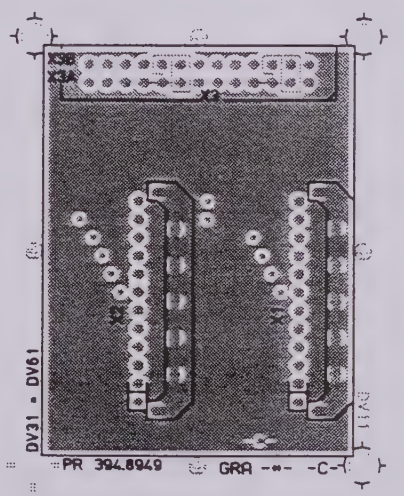

DV 11

VARIANTENERKLÄRUNG / VERSION
VAR 02 – GRUNDAUSFÜHRUNG / BASIC MODEL

				Maße ohne Toleranzangabe		Maßstab	
						Halbzeug, Werkstoff	
				1KSU	Tag / Name	Benennung	
				Bearb	03.86 / LI	Buchsenplatte CONNECTOR BOARD	Z
				Gepr			
				Norm			
				ROHDE&SCHWARZ		Zeichn.-Nr 394.8932.01	Blatt-Nr 3
And Zust.	Änderungs-Mitteilung	Tag	Name	zu Gerät		reg i V 394.8010 V erste Z	v B

Für diese Unterlage behalten
wir uns alle Rechte vor

Für diese Unterlage behalten
wir uns alle Rechte vor

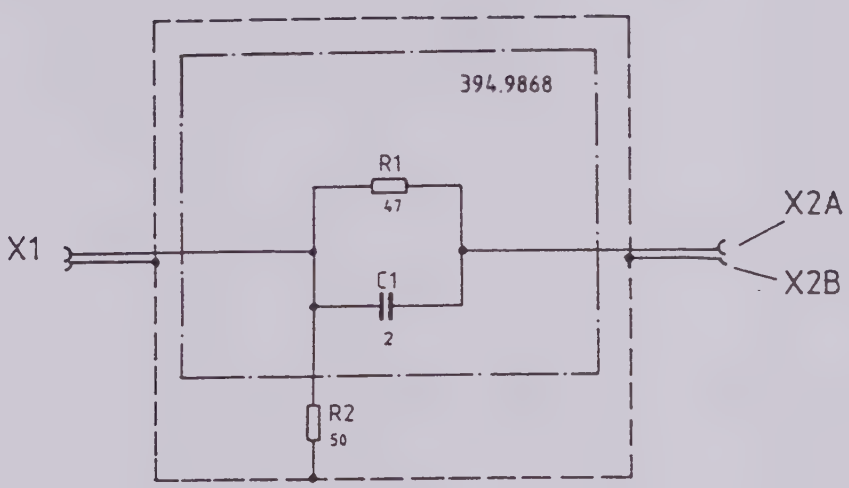

B	32108	8.85	Li		Tag	Name	Benennung
				Bearb	5.84	1KSU Li	50-OHM Adapter
				Gepr			
				Norm			
				ROHDE & SCHWARZ			Zeichn.-Nr 394.9816 S; Blatt-Nr 1 v 1 Bl
And Zust	Anderungs-Mitteilung	Tag	Name	zu Gerat			reg. v 394.9816V; erste Z 394.9816

Ansicht und Leitungsführung Bauteilseite
View of tracks on component side

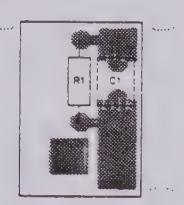

Ansicht und Leitungsführung Lötseite
View of tracks on solder side

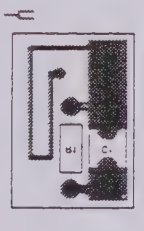

Für diese Unterlage behalten
wir uns alle Rechte vor

A	———	11.83	KL	Maße ohne Toleranzangabe		Maßstab 2 : 1		
B	32108	1.85	Li			Halbzeug, Werkstoff		
				1KGU	Tag	Name	Benennung	
				Bearb	11.83	KL	Platte	Z
				Gepr				
				Norm				
				ROHDE&SCHWARZ			Zeichn.-Nr 394.9868	Blatt-Nr 2
And. Zust	Änderungs-Mitteilung	Tag	Name	zu Gerat			reg. i. V 394.9816V erste Z. 394.9816	v Bl

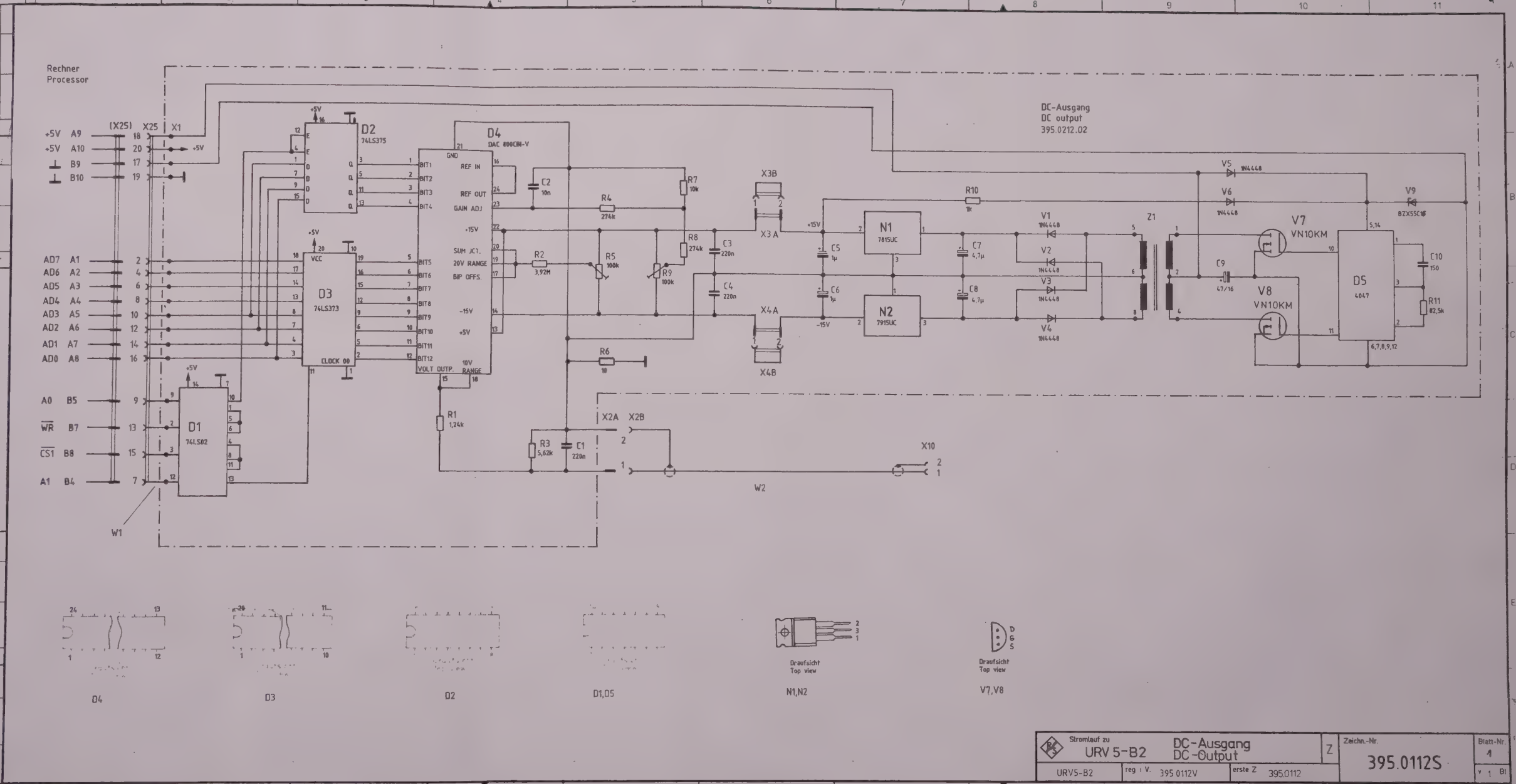

Stromlauf zu URV 5-B2	DC-Ausgang DC-Output	Z	Zeichn.-Nr. 395.0112S	Blatt-Nr. 1
URV5-B2	reg. i. V. 395.0112V	erste Z 395.0112		v 1 Bl

Zeichn.-Nr.	Datum	Name	zust	Nr.	Datum	Name
1KGU			A	31289	08.84	Li
gezeichnet	7.09.83	Hg	B	—	8.85	Li
bearbeitet	09.83	Hr	C		9.88	Li
geprüft						
normgepr						

ROHDE&SCHWARZ

wir uns alle Rechte vor.

Ansicht und Leitungsführung Bauteilseite
View of tracks on component side

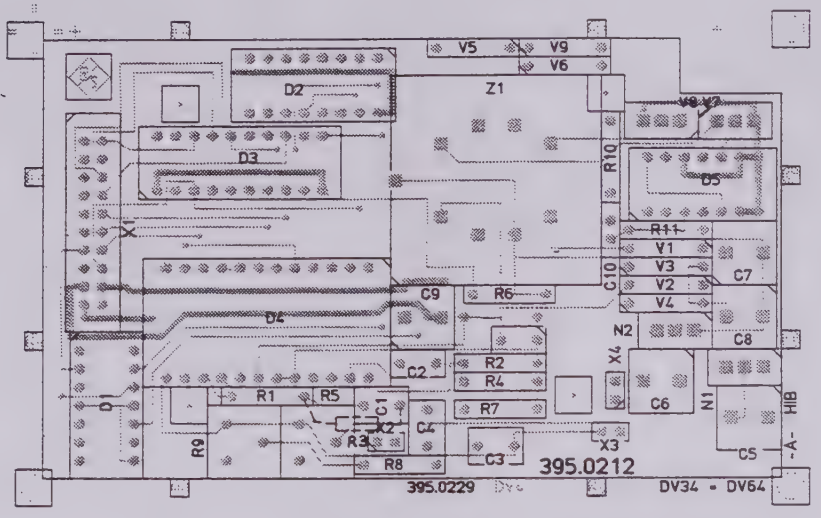

Ansicht und Leitungsführung Lötseite
View of tracks on solder side

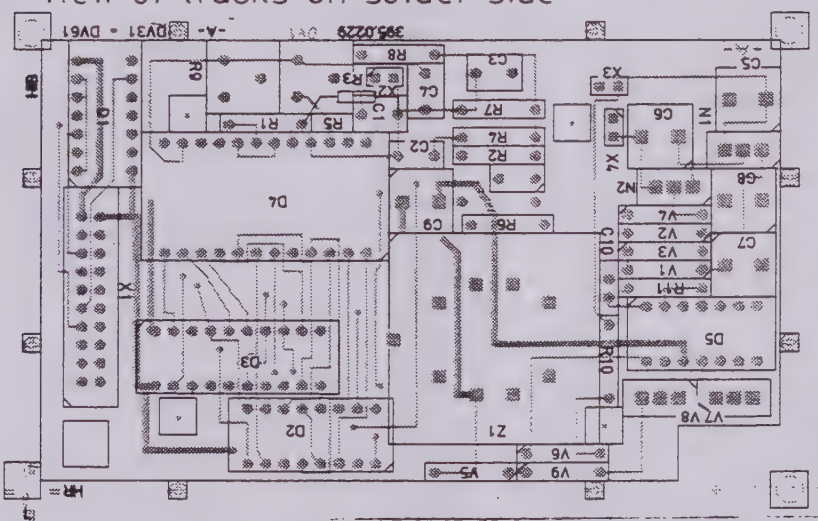

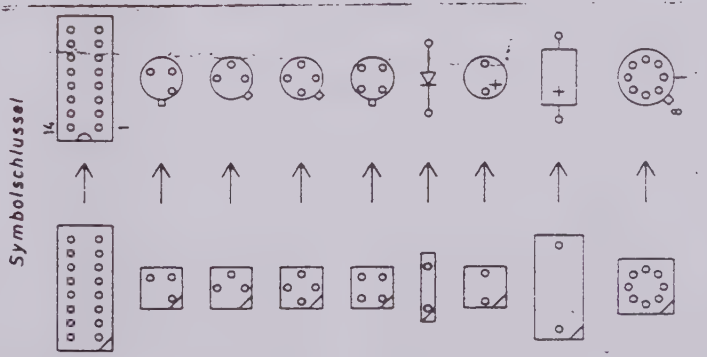

Achtung! MOS-Bauteile
Caution. MOS components

B	31829	08.84	Li.	Maße ohne Toleranzangabe		Maßstab 1 : 1	
						Halbzeug, Werkstoff	
				1KGU	Tag	Name	Benennung: DC-Ausgang — Z
				Bearb	10.83	HR	
				Gepr.			
				Norm			
And Zust	Änderungs-Mitteilung	Tag	Name	ROHDE&SCHWARZ		Zeichn.-Nr 395.0212	Blatt-Nr 2 v Bl.
				zu Gerät URV5-B2		reg. i. V 395.0112V	erste Z. 395.0212

Für diese Unterlage behalten wir uns alle Rechte vor

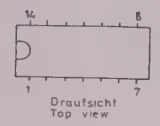

D10,D11

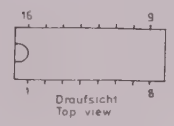

D12

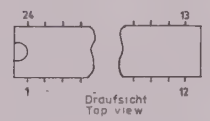

D13

Variantenerklärung/Version zu/to 395.2915:

VAR 02 ohne/not incl. X18,X19,X20
VAR 03 ohne/not incl. X12,X13,X14,X15,X16,X18,X20
mit/with X11-X17 Verbindung/Connection
VAR 04 ohne/not incl. X11, ,X19,R13,V10

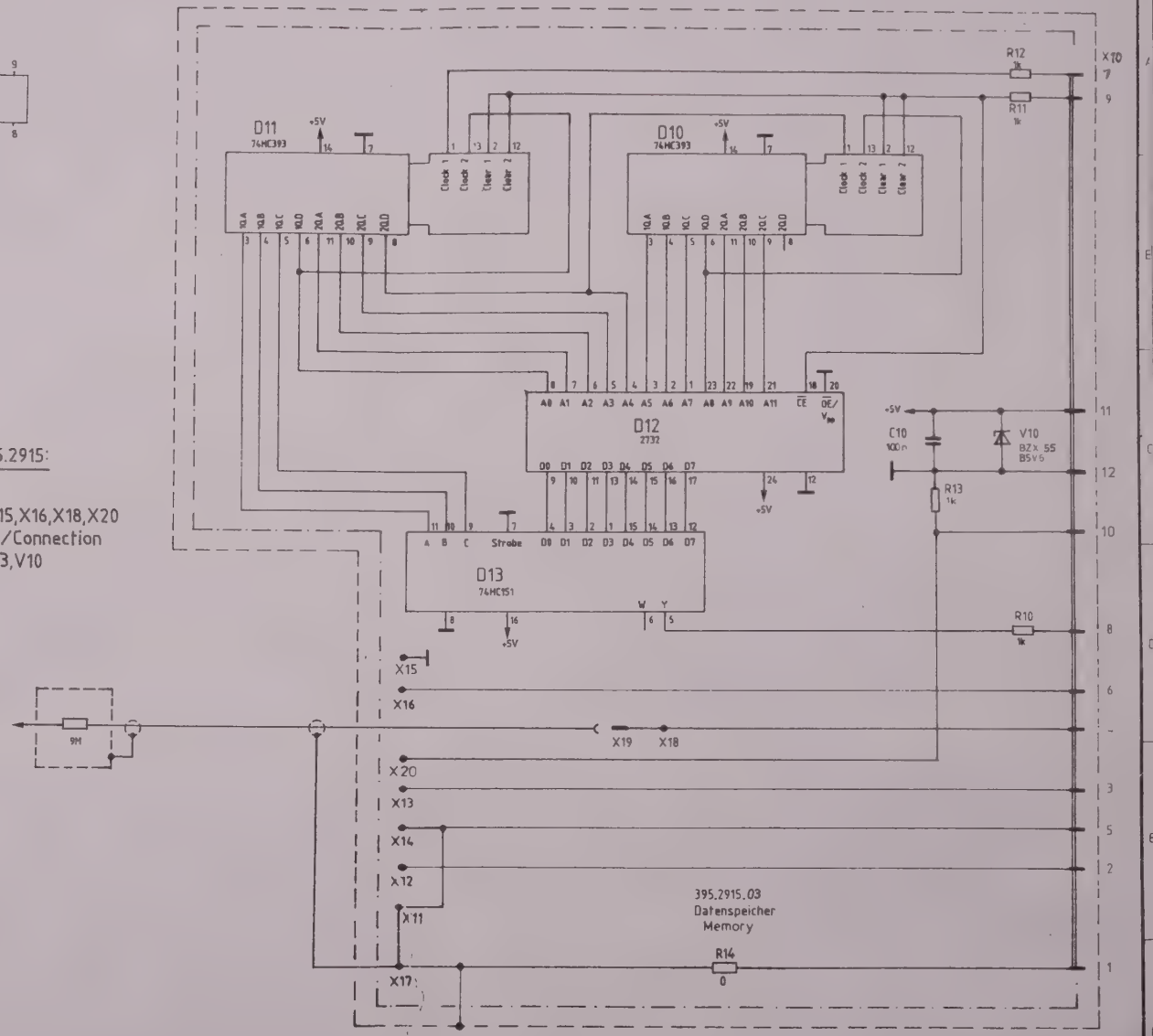

ROHDE & SCHWARZ MÜNCHEN

A	30854	10.83	Hi
B	31397	08.84	Li

gezeichnet	26.[illegible]3	Hg	
bearbeitet	05.83	Li	
geprüft			
normgepr.			

Stromlauf zu DC-Tastkopf URV5-Z1
DC-Probe

Z

Zeichn Nr 395.0512S

reg V 395.0512V

erste Z

ACHTUNG: EGB
Elektrostatisch gefährdete Bauelemente erfordern eine besondere Handhabung
ATTENTION: ESD
Electrostatic sensitive devices require a special handling

Variantenerklärung

VAR 04 = EMBARGO-Ausführung
VAR 55 = 50Ω Ausführung mit N-Stecker und N-Buchse
VAR56 = 50Ω Ausführung mit N-Stecker und N-Buchse mit 5m langen Anschlusskabel

D11
74HC393
+5V
14
7
3 4 5 6 11 10 9 8

D12
24
9
1
8
Draufsicht
Top view

D13
16
9
1
8
Draufsicht
Top view

-3
+2
V3
1
Bottom view

D10,D11
14
8
1
7
Draufsicht
Top view

395.1319.02
Sensorplatte
Sensor board

X21
X22
X6
X5
X7
X3
X4
X2
X1
X8
V3
LM335H
C4
1n
V1
V2
R1
47
C1
10n
C3I
1n
C3
C3II
1n
L
R3
10k
R4
10k
ge/yel
gn/grn
ws/wht
br/brn

395.1419.02
Anschlußplatte
Connector board

ROHDE & SCHWARZ MUNCHEN

A	31398	03.84	Li
B	34340	8.85	Li
C	39963	5.88	Hi
D	41366	2.30	Li
06	AE	11.93	Wo

04	Hg
03.84	Li

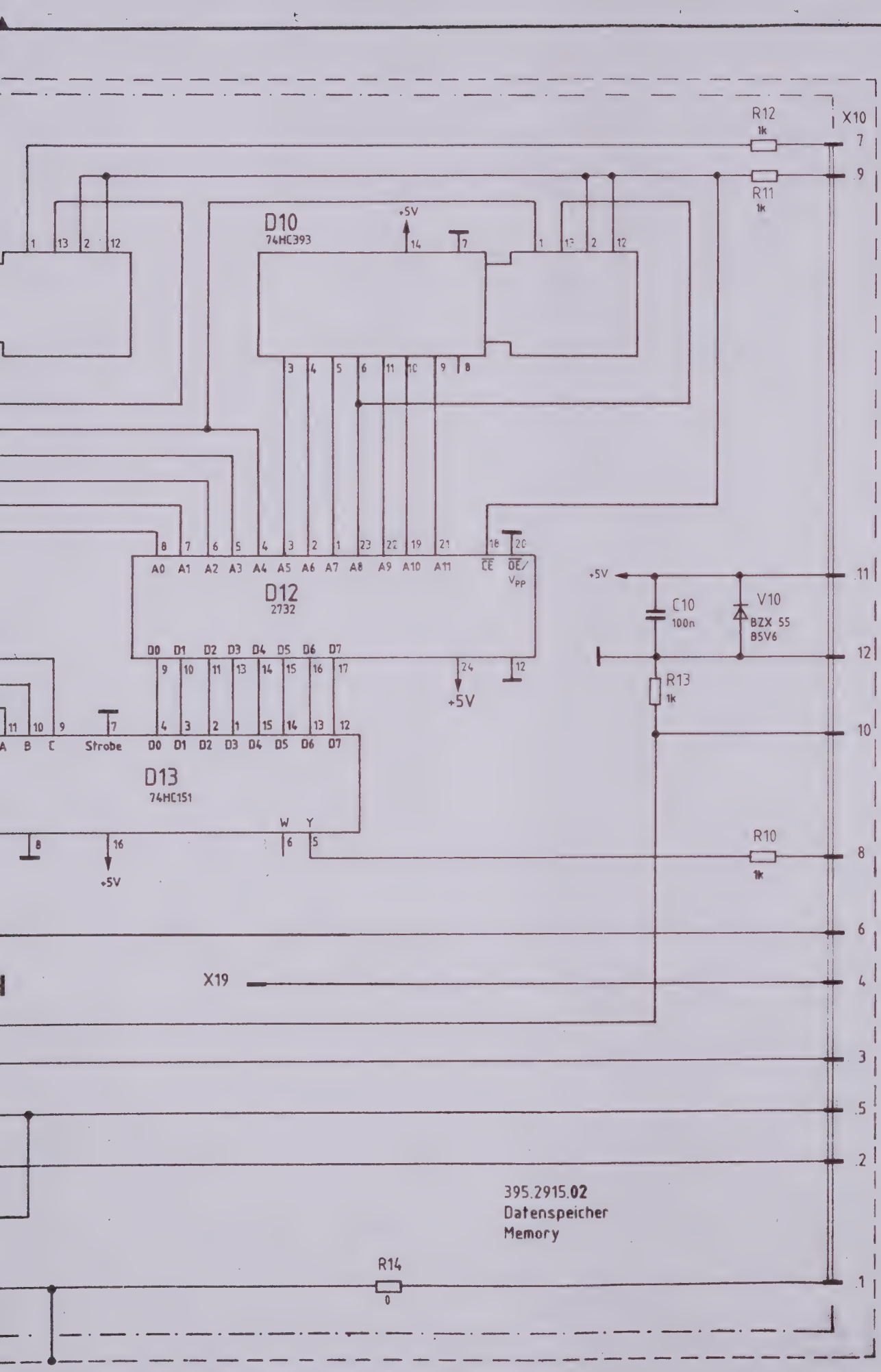

Stromlauf zu 10V Durchgangskopf 10V Insertion unit	URV5-Z2	Zeichn. Nr. 395.1019 S	1v2
		reg. 395.1019	erste Z. 395.1019

ACHTUNG: EGB !
ELEKTROSTATISCH GEFAEHRDETE
BAUELEMENTE ERFORDERN EINE
BESONDERE HANDHABUNG.
ATTENTION ESD !
ELECTROSTATIC SENSITIVE DEVICES
REQUIRE A SPECIAL HANDLING

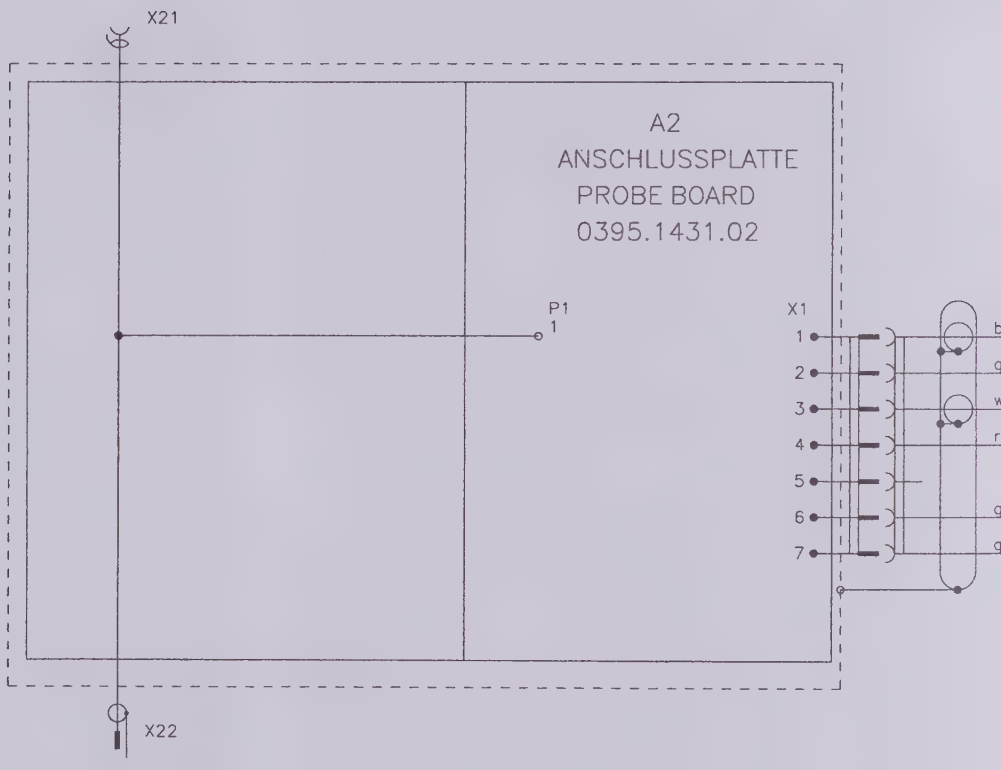

FUER DIESE UNTERLAGE
BEHALTEN WIR UNS ALLE RECHTE VOR

Bindende Angaben ueber Varianten,
Trimmwerte, Bauteile und
nicht bestueckte Bauteile siehe SA.

FOR BINDING INFORMATION ON MODELS,
TRIMMING AND COMPONENTS VALUES AND
NONFITTED COMPONENTS SEE PARTS LIST

ROHDE&SCHWARZ

06									1GPK	Datum	Name
									Bearb.	11.10.97	DR
									Gepr.		SR
Aend. Zust.	Aenderunsmitteilung	Datum	Name	Aend. Zust.	Aenderunsmitteilung	Datum	Name	Norm			

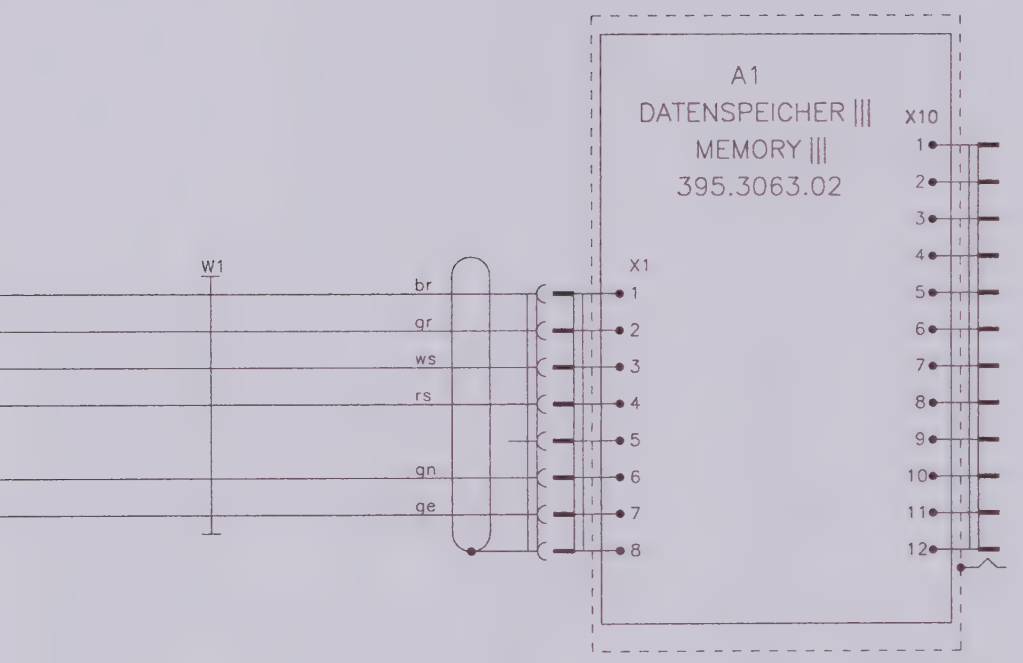

PROBE	A1 MEMORY III			
	S1a	S1b	S2a	S2b
URV5-Z2	on	off	off	off

VARIANTENERKLAERUNG/VERSIONS

VAR02 = NEUE AUSF.
MOD02 = NEW MODEL

VAR05 = NEUE AUSF. MIT ANSCHLUSSKABEL 5M
MOD05 = NEW MODEL WITH CONNECTING CABLE 5M

Benennung	Zeichn.-Nr.	BLATT-NR.
10V DURCHGANGS.-KOPF 10V INSERT.UNIT	0395.1019.01 S	2-
ZU GERAET URV5-Z2	REG. I. V. 0395.1019.01	ERSTE Z.

Ansicht und Leitungsführung Bauteilseite
View of tracks on component side

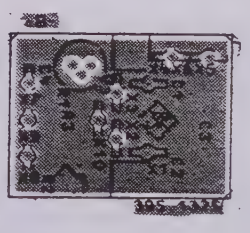

Ansicht und Leitungsführung Lötseite
View of tracks on solder side

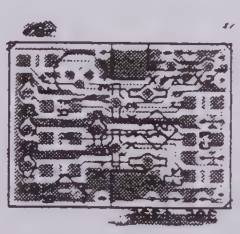

Für diese Unterlage behalten
wir uns alle Rechte vor

C	39963 (2)	06.88	Li	Maße ohne Toleranzangabe		Maßstab 1 : 1	
						Halbzeug, Werkstoff	
				1KGU	Tag	Name	Benennung: Sensorplatte / Sensor board — Z
				Bearb	12.85	Li	
				Gepr			
				Norm			
				ROHDE&SCHWARZ		Zeichn.-Nr. 395.1319	Blatt-Nr. 2 v. Bl
And Zust	Anderungs-Mitteilung	Tag	Name	zu Gerat URV 5 - Z2		reg. i V. 395.1019 V	erste Z 395.1019

Ansicht und Leitungsführung Bauteilseite
View of tracks on component side.

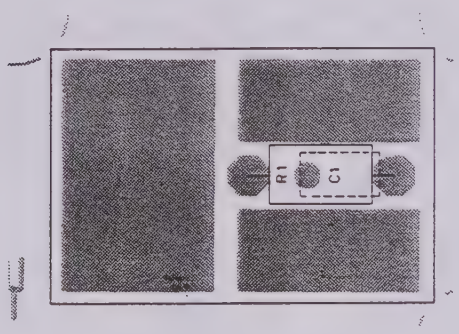

Ansicht und Leitungsführung Lötseite
View of tracks on solder side

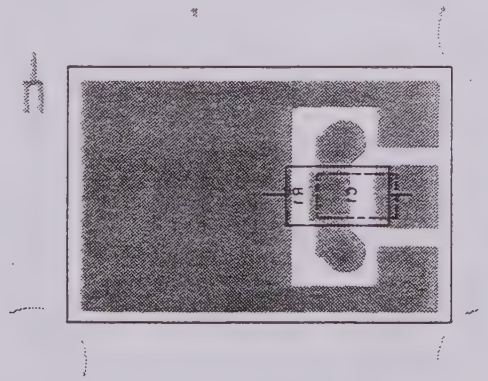

Für diese Unterlage behalten
wir uns alle Rechte vor

A		9.83	KL	Maße ohne Toleranzangabe		Maßstab 4 : 1	
						Halbzeug, Werkstoff	
				1KGU	Tag	Name	Benennung: Anschlußplatte / Connector board — Z
				Bearb	9.83	KL	
				Gepr			
				Norm			
				ROHDE&SCHWARZ		Zeichn.-Nr 395.1419	Blatt-Nr. 2 v. Bl
And Zust.	Änderungs-Mitteilung	Tag	Name	zu Gerät URV5-Z2		reg. i. V. 395.1019 V	erste Z. 395.1019

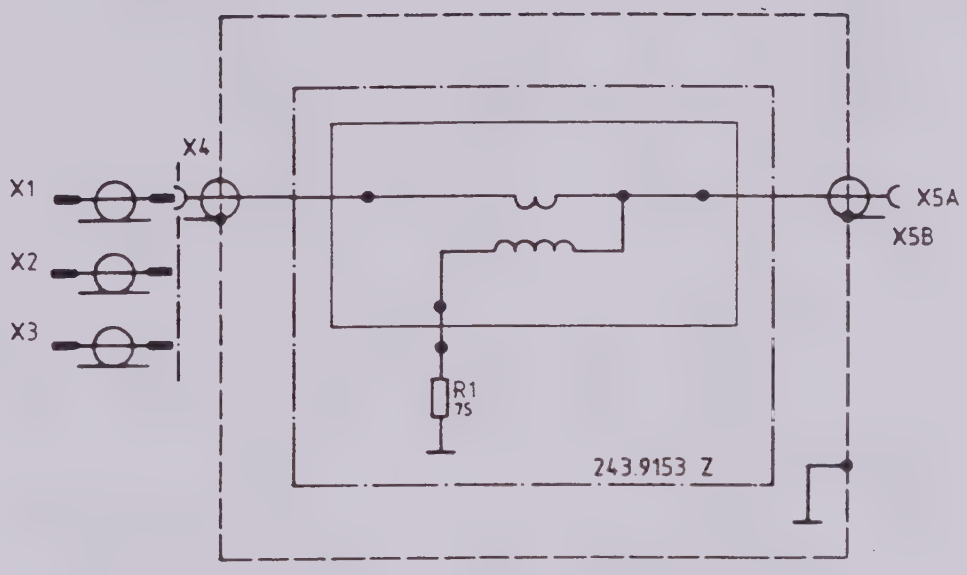

Für diese Unterlage behalten
wir uns alle Rechte vor

Variantenerklärung/Versions:
VAR 70 = Grundausführung/Basic model

			1KSU	Tag	Name
			Bearb	09.87	WK
			Gepr		
			Norm		
			ROHDE&SCHWARZ		
And	Anderungs-Mitteilung	Tag	Name		
Zust					

Benennung: 75 OHM Adapter

Z

Zeichn.-Nr.: 243.9118 S

Blatt-Nr: 1

v 1 Bl

zu Gerat URV - Z3

reg · V 243.9118 V

erste Z

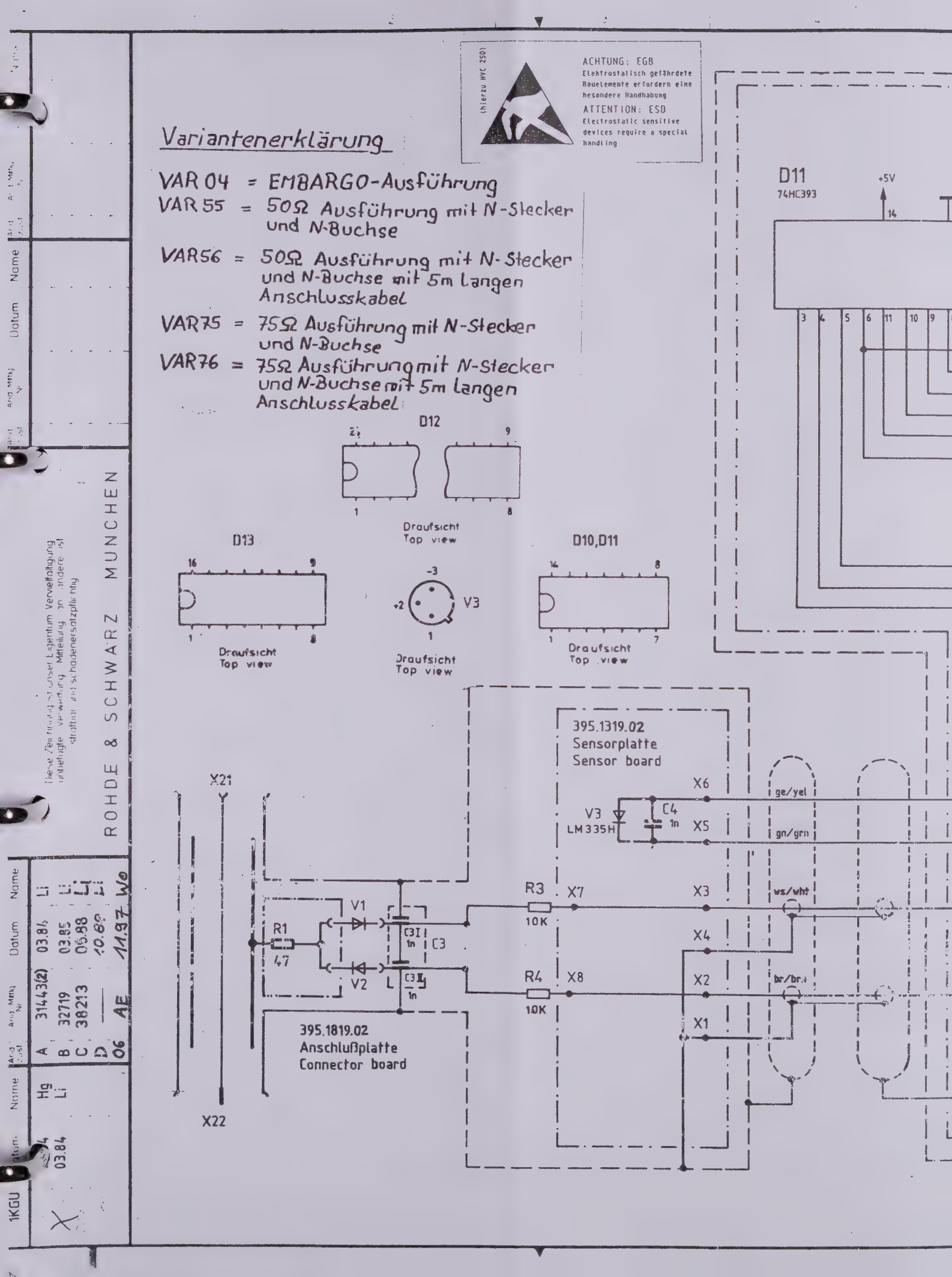

(hierzu HVC 250)
ACHTUNG: EGB
Elektrostatisch gefährdete Bauelemente erfordern eine besondere Handhabung
ATTENTION: ESD
Electrostatic sensitive devices require a special handling
Variantenerklärung
VAR 04 = EMBARGO-Ausführung
VAR 55 = 50Ω Ausführung mit N-Stecker und N-Buchse
VAR56 = 50Ω Ausführung mit N-Stecker und N-Buchse mit 5m langen Anschlusskabel
VAR75 = 75Ω Ausführung mit N-Stecker und N-Buchse
VAR76 = 75Ω Ausführung mit N-Stecker und N-Buchse mit 5m langen Anschlusskabel
D11
74HC393
+5V
D12
Draufsicht
Top view
D13
Draufsicht
Top view
V3
Draufsicht
Top view
D10,D11
Draufsicht
Top view
395.1319.02
Sensorplatte
Sensor board
X6
X5
V3
LM335H
C4
1n
ge/yel
gn/grn
X21
X22
R1
47
V1
V2
C3I
1n
C3
C3II
1n
R3
10K
R4
10K
X7
X8
X3
X4
X2
X1
ws/wht
br/brn
395.1819.02
Anschlußplatte
Connector board
ROHDE & SCHWARZ MÜNCHEN
Diese Zeichnung ist unser Eigentum Vervielfältigung unbefugte Verwertung Mitteilung an andere ist strafbar und schadenersatzpflichtig
1KGU
Datum
Name
A 31443(2) 03.84 Li
B 32719 03.85 Li
C 38213 06.88 Li
D — 10.89 Li
06 AE 11.97 Wo

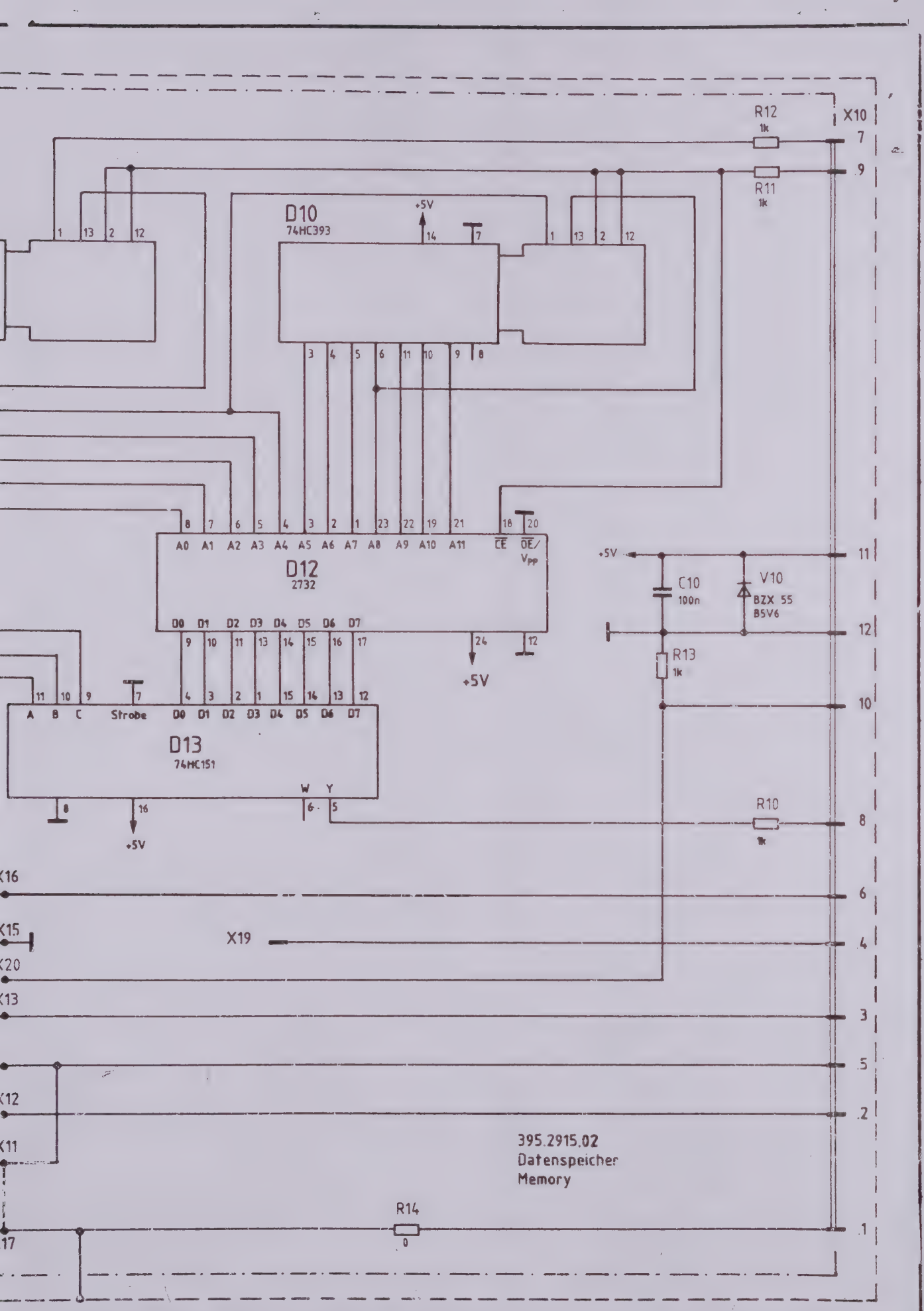
R12
1k
X10
7
R11
1k
9
D10
74HC393
+5V
14
7
1
13
2
12
3
4
5
6
11
10
9
8
D12
2732
A0 A1 A2 A3 A4 A5 A6 A7 A8 A9 A10 A11
CE
OE/ Vpp
18
20
23
22
19
21
D0 D1 D2 D3 D4 D5 D6 D7
24
12
+5V
C10
100n
V10
BZX 55
B5V6
11
12
R13
1k
10
D13
74HC151
A B C
Strobe
W Y
16
6
5
R10
1k
8
X16
6
X15
X19
4
X20
X13
3
5
X12
2
X11
17
R14
0
1
395.2915.02
Datenspeicher
Memory
100V Durchgangskopf
100V Insertion unit
URV5-Z4
Zeichn Nr 395.1619 S
1v2
395.1619
395.1619

ACHTUNG: EGB !
ELEKTROSTATISCH GEFAEHRDETE
BAUELEMENTE ERFORDERN EINE
BESONDERE HANDHABUNG.
ATTENTION ESD !
ELECTROSTATIC SENSITIVE DEVICES
REQUIRE A SPECIAL HANDLING

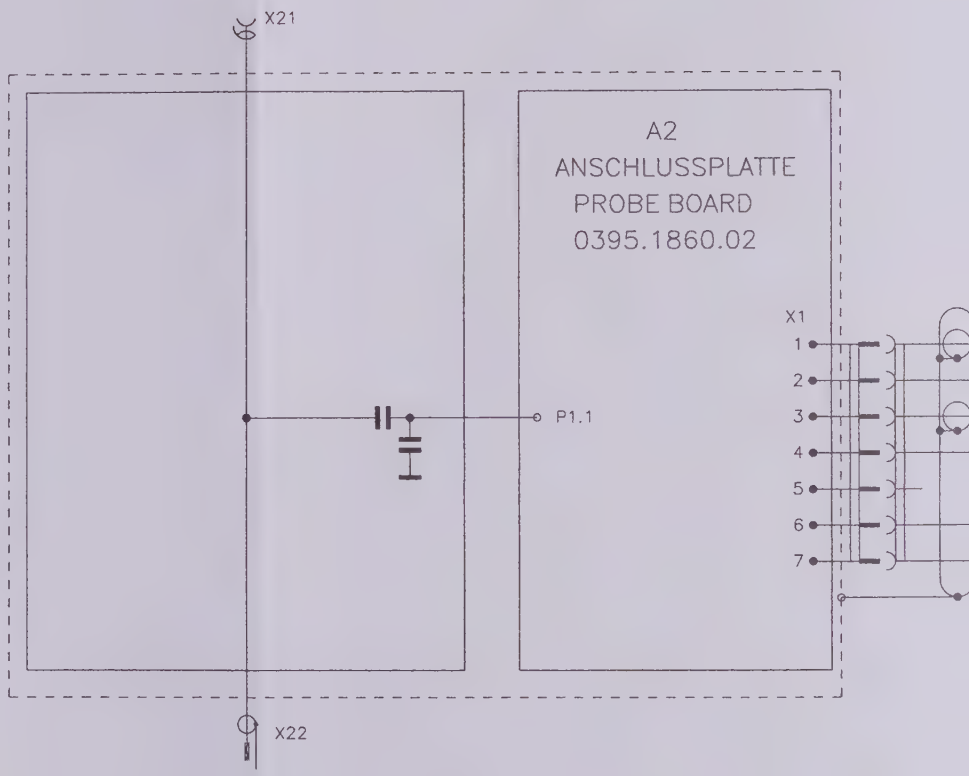

FUER DIESE UNTERLAGE
BEHALTEN WIR UNS ALLE RECHTE VOR

Bindende Angaben ueber Varianten,
Trimmwerte, Bauteile und
nicht bestueckte Bauteile siehe SA.

FOR BINDING INFORMATION ON MODELS,
TRIMMING AND COMPONENTS VALUES AND
NONFITTED COMPONENTS SEE PARTS LIST

ROHDE&SCHWARZ

06									1GPK	Datum	Name
									Bearb.	11.11.97	DR
									Gepr.		SR
Aend. Zust.	Aenderunsmitteilung	Datum	Name	Aend. Zust.	Aenderunsmitteilung	Datum	Name		Norm		

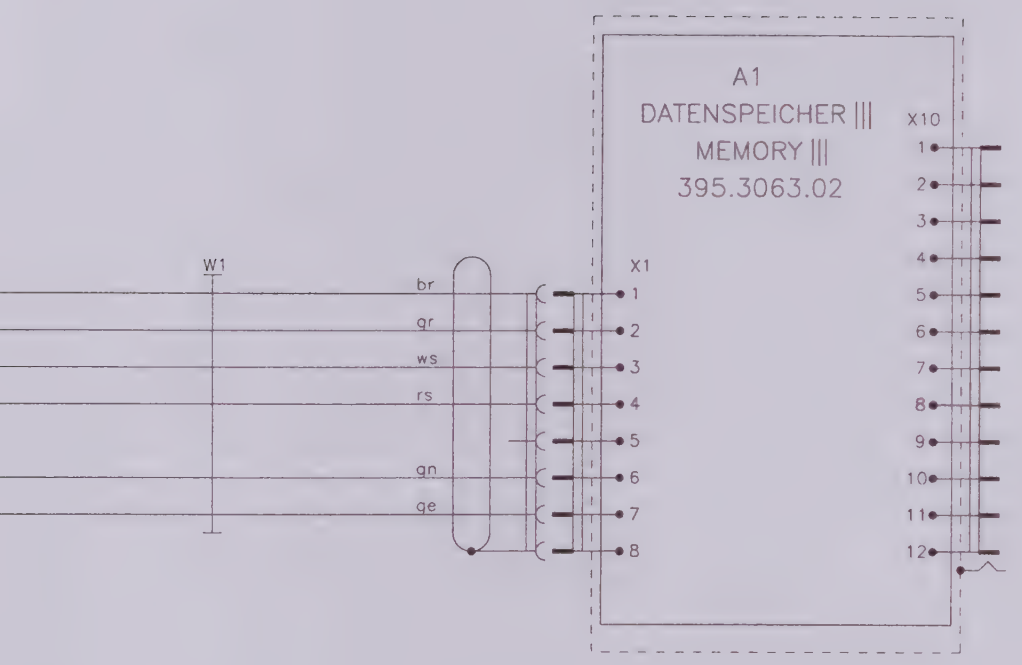

PROBE	A1 MEMORY |||			
	S1a	S1b	S2a	S2b
URV5-Z4	on	off	off	off

VARIANTENERKLAERUNG/VERSIONS

VAR02 = NEUE 50 OHM AUSF.
MOD02 = NEW 50 OHM MODEL

VAR05 = NEUE 50 OHM AUSF. MIT ANSCHLUSSKABEL 5M
MOD05 = NEW 50 OHM MODEL WITH CONNECTING CABLE 5M

Benennung	Zeichn.-Nr.	BLATT-NR.
100V DURCHGANGS.-KOPF 100V INSERT.UNIT	0395.1619.01 S	2-
ZU GERAET URV5-Z4]	REG. I. V. 0395.1619.01	ERSTE Z.

Ansicht und Leitungsführung Bauteilseite
View of tracks on component side

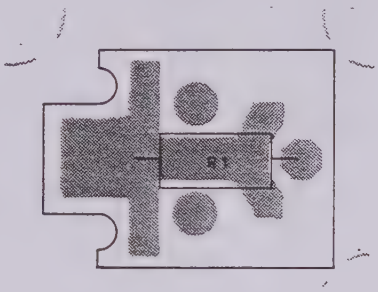

Ansicht und Leitungsfuhrung Lötseite
View of tracks on solder side

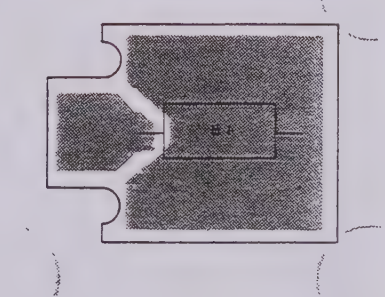

Für diese Unterlage behalten
wir uns alle Rechte vor

A	———	9.83	KL	Maße ohne Toleranzangabe		Maßstab 4 : 1	
						Halbzeug, Werkstoff	
				1KGU	Tag	Name	Benennung
				Bearb.	9.83	KL	Anschlußplatte Connector board
				Gepr			Z
				Norm			
				ROHDE&SCHWARZ		Zeichn -Nr	Blatt-Nr
						395.1819	2
And. Zust	Änderungs-Mitteilung	Tag	Name	zu Gerat URV5 - Z4		reg i. V 395.1619 V	erste Z. 395.1619

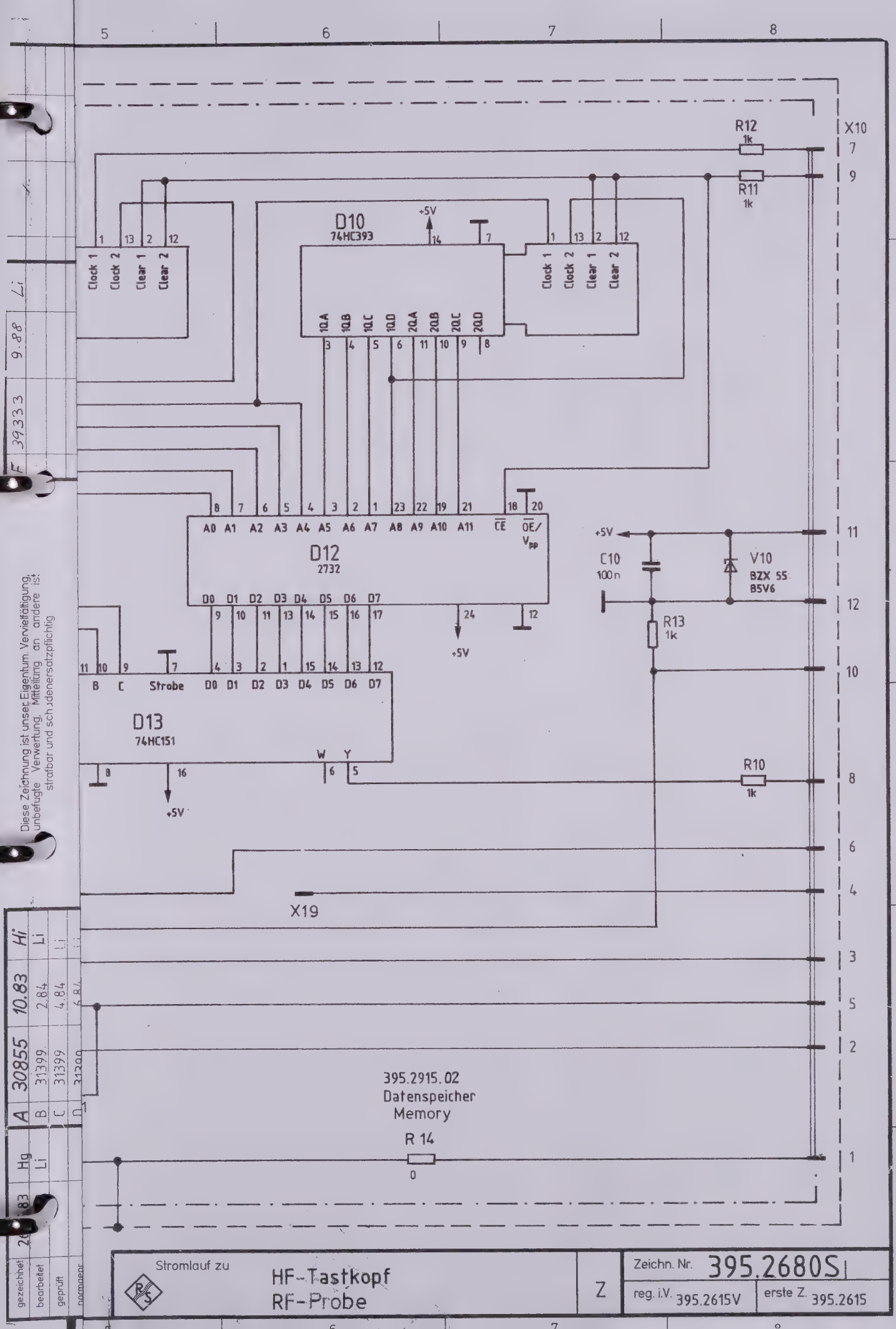

R12
1k
R11
1k
X10
D10
74HC393
+5V
Clock 1
Clock 2
Clear 1
Clear 2
1Q.A
1Q.B
1Q.C
1Q.D
2Q.A
2Q.B
2Q.C
2Q.D
D12
2732
A0 A1 A2 A3 A4 A5 A6 A7 A8 A9 A10 A11
CE
OE/Vpp
D0 D1 D2 D3 D4 D5 D6 D7
C10
100n
V10
BZX 55
B5V6
R13
1k
D13
74HC151
B C Strobe D0 D1 D2 D3 D4 D5 D6 D7
W Y
R10
1k
X19
395.2915.02
Datenspeicher
Memory
R 14
0
Stromlauf zu
HF-Tastkopf
RF-Probe
Z
Zeichn. Nr. 395.2680S
reg. i.V. 395.2615V
erste Z. 395.2615
gezeichnet
bearbeitet
geprüft
normgepr
Hg
Li
A 30855 10.83 Hi
B 31399 2.84 Li
C 31399 4.84 Li
D 31399 6.84 Li
F 39333 9.88 Li
Diese Zeichnung ist unser Eigentum. Vervielfältigung, unbefugte Verwertung, Mitteilung an andere ist strafbar und schadenersatzpflichtig

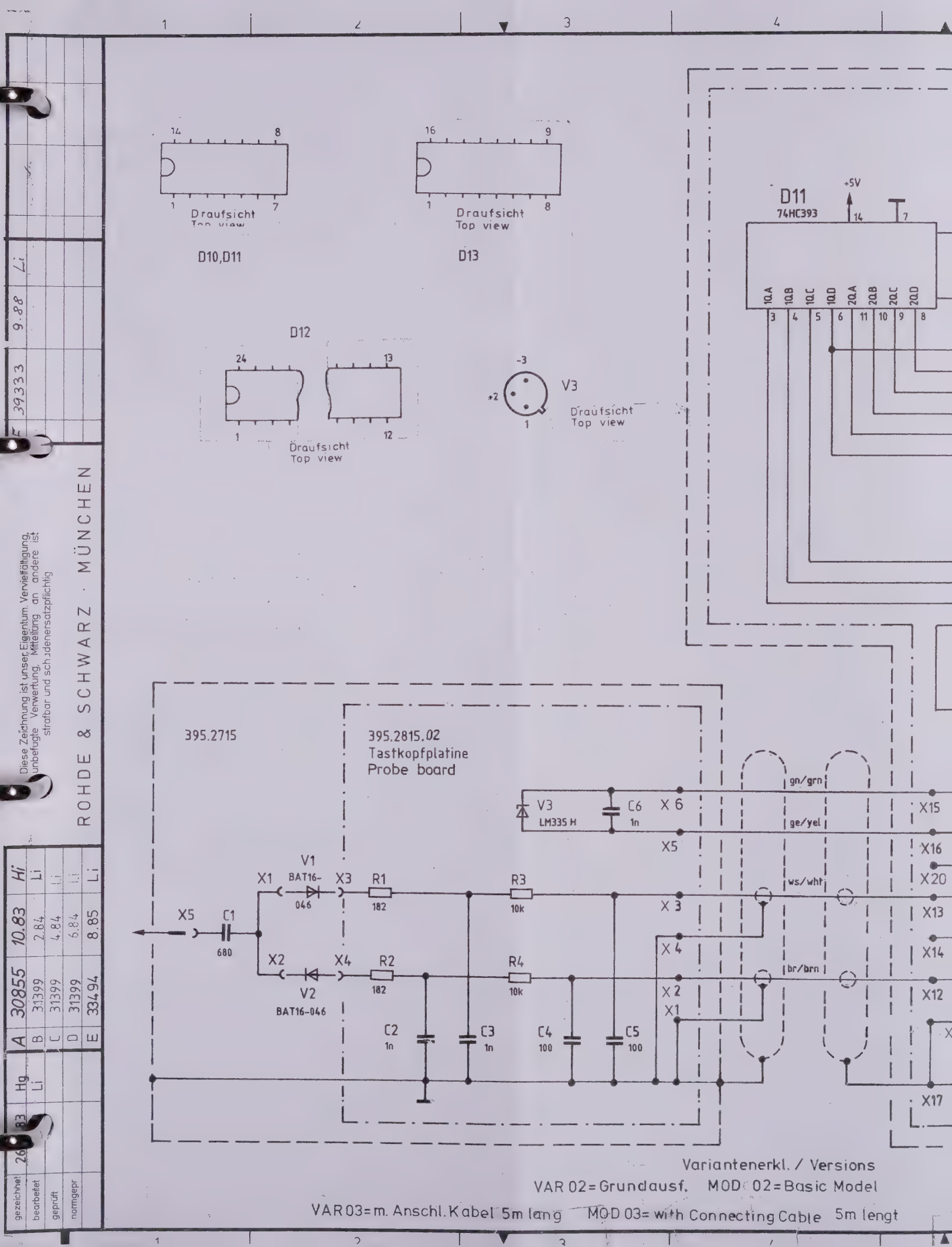

Variantenerkl. / Versions

VAR 02 = Grundausf. MOD 02 = Basic Model

VAR 03 = m. Anschl. Kabel 5m lang MOD 03 = with Connecting Cable 5m lengt

Diese Zeichnung ist unser Eigentum. Vervielfältigung, unbefugte Verwertung, Mitteilung an andere ist strafbar und schadenersatzpflichtig

ROHDE & SCHWARZ · MÜNCHEN

gezeichnet	26.83	Hg	A	30855	10.83	Hi
bearbeitet		Li	B	31399	2.84	Li
geprüft			C	31399	4.84	Li
normgepr			D	31399	6.84	Li
			E	33494	8.85	Li

F 39333 9.88 Li

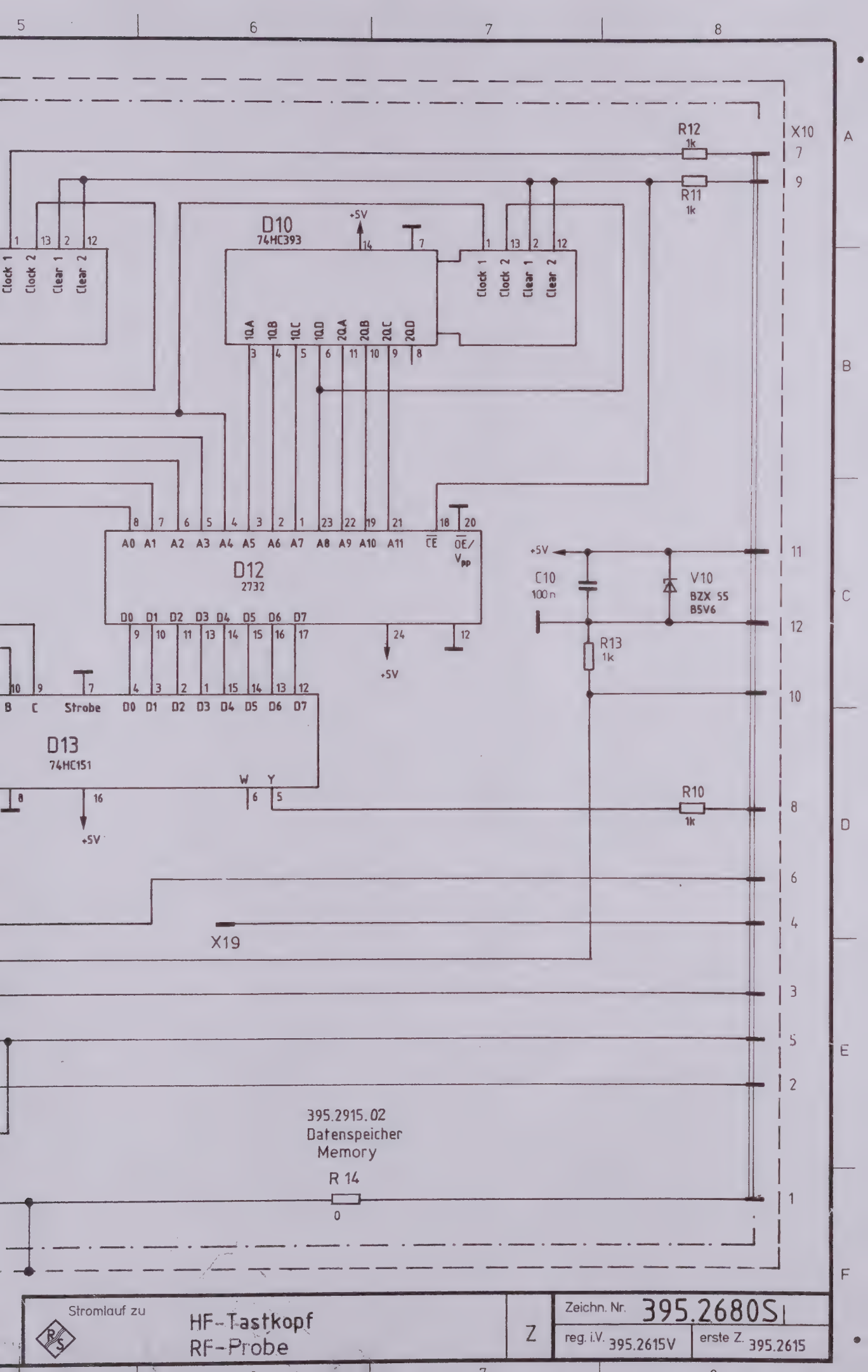
5
6
7
8
A
B
C
D
E
F
R12
1k
R11
1k
X10
7
9
D10
74HC393
+5V
14
7
1
13
2
12
Clock 1
Clock 2
Clear 1
Clear 2
1Q.A
1Q.B
1Q.C
1Q.D
2Q.A
2Q.B
2Q.C
2Q.D
3
4
5
6
11
10
9
8
D12
2732
A0 A1 A2 A3 A4 A5 A6 A7 A8 A9 A10 A11 CE OE/Vpp
8 7 6 5 4 3 2 1 23 22 19 21 18 20
D0 D1 D2 D3 D4 D5 D6 D7
9 10 11 13 14 15 16 17
24
12
+5V
C10
100n
V10
BZX 55
B5V6
11
12
R13
1k
10
D13
74HC151
B C Strobe D0 D1 D2 D3 D4 D5 D6 D7
10 9 7 4 3 2 1 15 14 13 12
W Y
6 5
8
16
+5V
R10
1k
8
6
4
X19
3
5
2
1
395.2915.02
Datenspeicher
Memory
R 14
0
Stromlauf zu
HF-Tastkopf
RF-Probe
Z
Zeichn. Nr. 395.2680S
reg. i.V. 395.2615V
erste Z. 395.2615

Ansicht und Leitungs
View of tracks on co

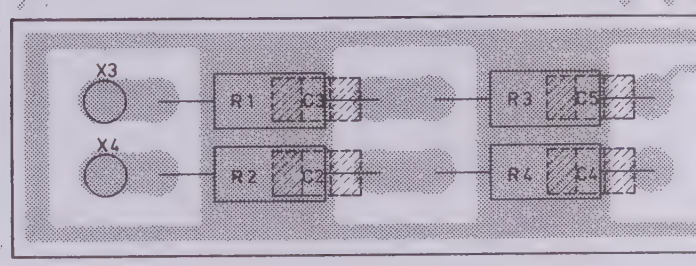

Ansicht und Leitungs
View of tracks on sol

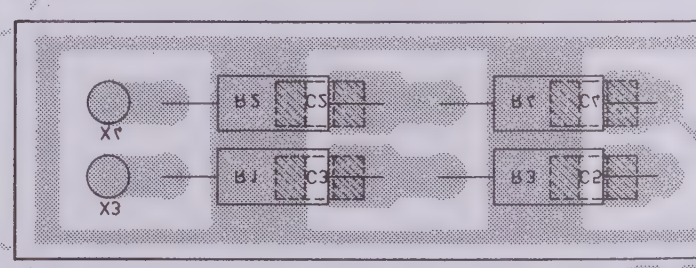

Für diese Unterlage behalten
wir uns alle Rechte vor.

ührung Bauteilseite
ponent side

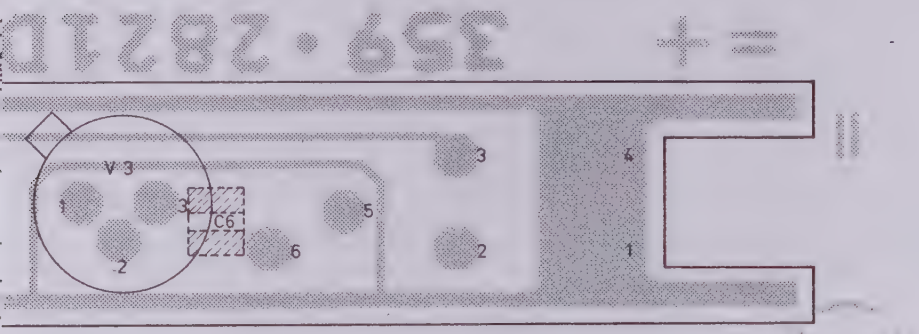

ührung Lötseite
er side

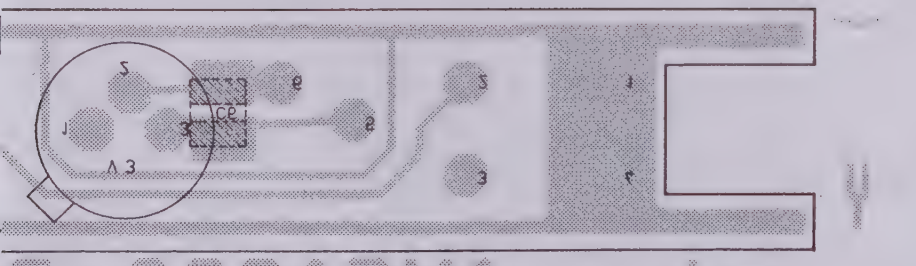

C	31399	08.84	Li	Maße ohne Toleranzangabe		Maßstab 4 : 1	
D	34871	4.86	Li			Halbzeug, Werkstoff	
				1KGE	Tag	Name	Benennung
				Bearb.	3.83	NL	Tastkopfplatte / Probe board
				Gepr.			Z
				Norm			
Änd. Zust.	Änderungs-Mitteilung	Tag	Name	ROHDE&SCHWARZ		Zeichn.-Nr. 395.2815	Blatt-Nr. 2 v. Bl.
				zu Gerät		reg. i. V. 395.2615 V	erste Z. 395.2715

07 6001 81

Ansicht und Leitungsführung Bauteilseite
View of tracks on component side

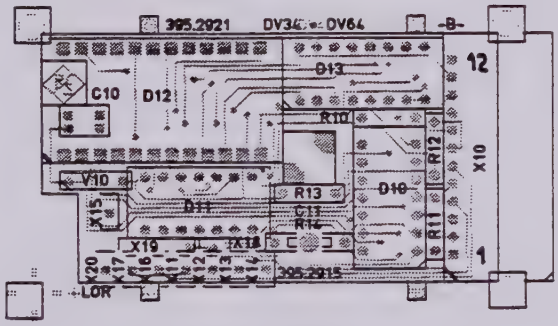

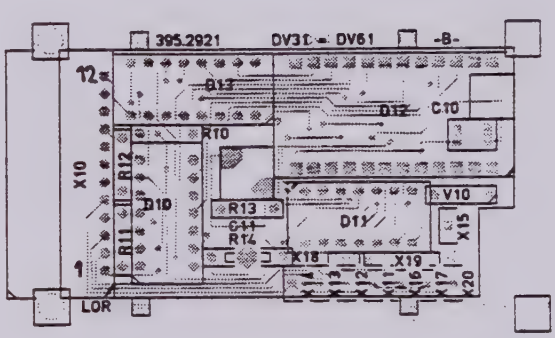

Ansicht und Leitungsführung Lötseite
View of tracks on solder side

Symbolschlüssel

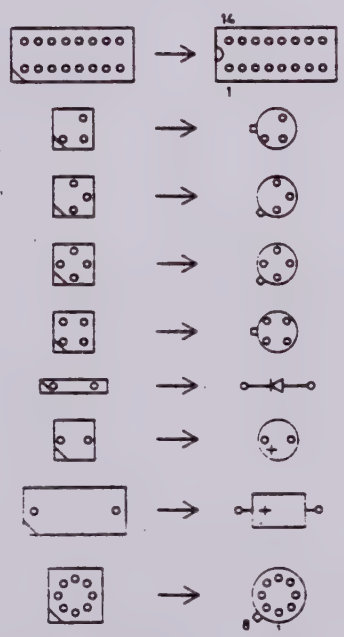

Achtung! MOS-Bauteile
Caution. MOS components

B		9.83	LI	Maße ohne Toleranzangabe	Maßstab 1 : 1
C	41367	1.89			Halbzeug, Werkstoff
				1KGU Tag Name	Benennung: Datenspeicher / Memory — Z
				Bearb 9.83 LI	
				Gepr	
				Norm	
				ROHDE&SCHWARZ	Zeichn.-Nr 395.2915 — Bl. 2
And. Zust.	Änderungs-Mitteilung	Tag	Name	zu Gerät URV5-Z7	Ers. f. 395.2615V — Ers. d. 395.2680

Für diese Unterlage behalten wir uns alle Rechte vor

www.manualsplus.com
1025856